Field instruments

...by experience

SATRON instruments

Satron Instruments Inc. 20.02.2003

Contents of FIELD INSTRUMENTS product catalogue

Satron Instruments Inc., P.O.Box 240, FIN-33201 Tampere, Finland
Tel. +358 3 387 1800, Telefax +358 3 387 1899
www.satron.com, e-mail: info@satron.com

Expressing performance

January 10, 2000

Some of the most common quantities expressing performance and the reference conditions in which they are measured are described on this page. The following description conforms to the IEC 546 and IEC 770 recommendations.
Values of performance specifications apply to 316 SS diaphragms, unless standard material otherwise defined.

Quantities used for expressing performance

Non-linearity is the maximum deviation of the characteristic curve (of the average of the increasing and decreasing portions) from the straight line drawn so as to minimize the deviation (= non-linearity with respect to independent straight line).
Conformity error is a term used instead of non-linearity if the ideal characteristic curve is not a straight line: conformity error is the maximum deviation of the average-deviation curve from the ideal characteristic curve drawn so as to minimize the deviation. Dead band, also known as neutral zone, is the range through which the input signal may vary without causing any perceptible change in the output signal.
Hysteresis, as a quantity expressing performance, is defined as the maximum difference between the increasing and decreasing output signal corresponding to the same input signal value when the input signal is changed through the full range in both directions.

Repeatability is the maximum deviation of output signal values corresponding to the same input signal value in consecutive measurements, when conditions remain unchanged and when this input signal value is always approached from the same direction while the input is changed through full range. Repeatability is calculated on the basis of measurement results from the formula.

$$\sqrt{\frac{\sum(x_i-\bar{x})^2}{N}}$$

where x_i = individual measurement result
$\bar{x}$ = average of measurement results
N = number of measurements

Accuracy requirements for measuring equipment in performance measurements

The errors of the measuring equipment used should be at least 1/4 of the performance of the device to be tested.

Reference conditions

Rated operating conditions, or reference conditions, refer to the equalization of such factors independent of the apparatus as affect performance, in order to obtain comparable performance values from the apparatus.
In performance testing of the devices included in this catalogue the reference conditions should be as follows:

Ambient conditions

- ambient temperature: +20°C ± 2°C
- relative humidity of air: 65 % ± 5 %
- pressure of air: 860 to 1060 mbar

Auxiliary energy

Electrical devices

- supply voltage: nominal voltage ± 1 %
- ripple ≤ 0.1 % (with DC voltage)

Pneumatic devices

- supply pressure: nominal pressure ± 1 %
- supply air temperature: ambient temperature: ± 2°C
- supply air humidity: dew point at least 10°C lower than the temperature of the device being tested
- supply air free from dust and oil, particle size less than 3 µm.

Other conditions

Position of device when tested: nominal position (normal mounting position).
Load: nominal load.

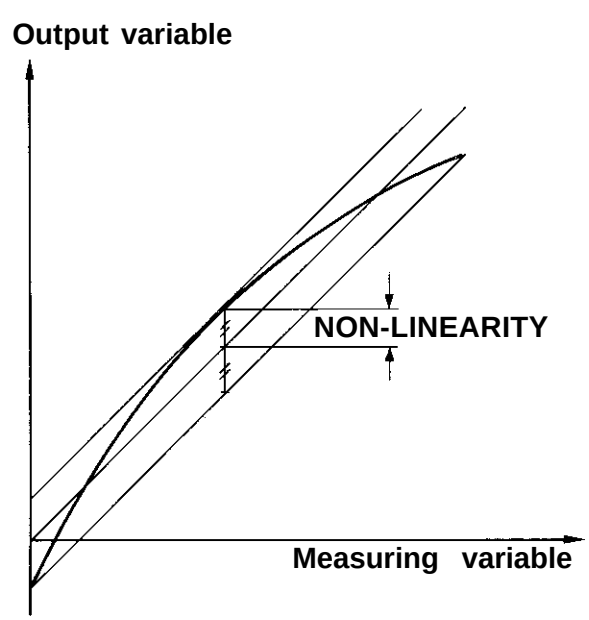

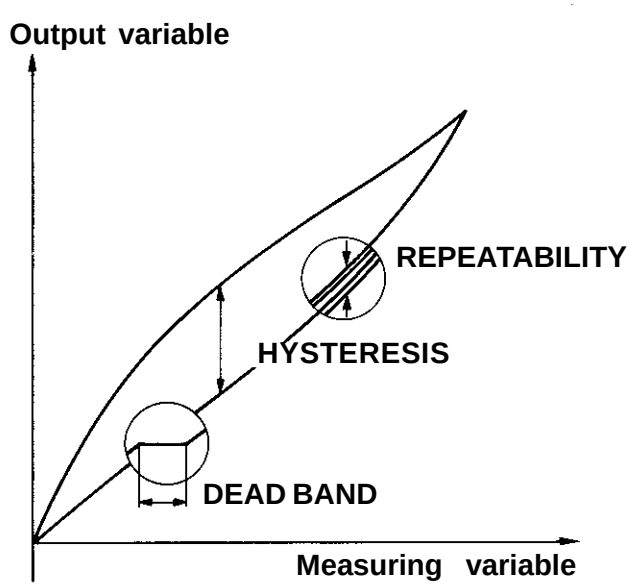

Satron Instruments Inc., P.O.Box 240, FIN-33201 Tampere, Finland
Tel. +358 3 387 1800, Telefax +358 3 387 1899, www.satron.com

Pressure measurement

Our instruments for pressure measurement:

HT pressure transmitter ..... Spec. BPH710

ALSO SUITABLE FOR PRESSURE MEASUREMENT
HG pressure transmitter .... Spec. BPLH700
HL pressure transmitter .... Spec. BLH820
SEE ALSO:
HPS hydraulic pressure seal ..... Spec. BP415

Process connections

Some typical connections for tapping the pressure are shown below. Fig. 1a is for liquids and gases, fig. 1b for steam, and fig. 1c for high-pressure service. Suggested material for the branch shown in fig. 1c is e.g. St35.8 or 13CrMo44. All burrs should be carefully removed from the tapping point. The processor coupling must be welded with a thin compound rod (max. diameter Ø 2.0 mm) to avoid harmful thermal strains, Fig. 1d.

Connection pipe

Recommended materials for the connection pipe:
- AISI304 stainless steel
- AISI316 acid-resistant steel

For high pressure measurements (above 100 bar):
- St35.8 or 13CrMo44 heat-resistant steels

Recommended pipe dimensions (o.d. x wall thickness):
- Ø 12 × 1 mm, Ø 12 × 1.5 mm, or Ø 14 × 2.5 mm.

It is recommendable always to equip the connection pipe with shut-off valves and, when necessary, with a pressure gauge connection valve.

For low pressures and for fluids liable to form sediments a ball valve should be used as shut-off valve. A threaded or welded needle valve is used for steam and high pressures.

Protection from pulsation

If pulsations caused by the process occur at the point of measurement, the instrument should be protected by means of a restriction, damping pot, or equivalent means. See figure 2 for connection pipe configuration. After the shut-off valve there is a bend for protective liquid or gas. A loop (12) is installed below the transmitter for collecting condensates.
Figure 2 gives an example of the measurement pipe arrangement for a pressure transmitter.
Figure 3 illustrates some applications of a pressure transmitter.

Figure 2

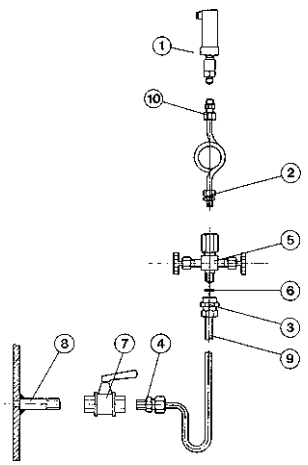

1 Pressure transmitter HT
2 Ø 12/R1/2" NPT stud coupling
3 Ø 12-R 1/2" pressure gauge connector
4 Ø 12-R 1/2" stud coupling
5 R1/2 pressure gauge connector
6 Gasket 18.5 x 7 mm
7 R l /2 ball valve
8 Process connection R 1/2 K
9 Pipe 12 mm dia. x 1.5 mm AISI 316
10 Ø 12/R 1/2 connector

Pressure trans-mitters	Adjustability			
	Span			Measuring range
	Smart, min.	**Analog,**min.	max.	
HT6	1.45 bar (0.15 MPa)	2.9 bar (0.29 MPa)	22 bar (2.2 MPa)	-1...+22 bar (-0.1...+2.2 MPa)
HT6A	1.45 bar (0.15 MPa)	2.9 bar (0.29 MPa)	22 bar (2.2 MPa)	0...+22 bar (0...+2.2 MPa),abs.
HT7	10 bar (1.0 MPa)	20 bar (2 MPa)	150 bar (15 MPa)	0...+150 bar (0...+15 MPa),abs.
HT8	67 bar (6.7 MPa)	132 bar (13.2 MPa)	1000 bar (100 MPa)	-1...+1000 bar(-0.1...+100 MPa),abs.

Figure 1

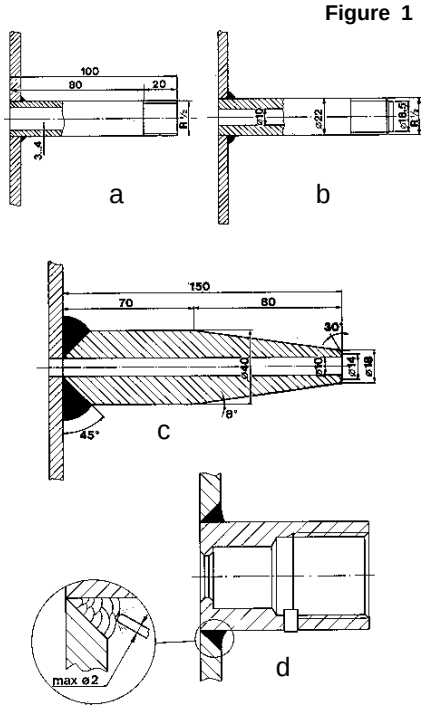

Figure 3

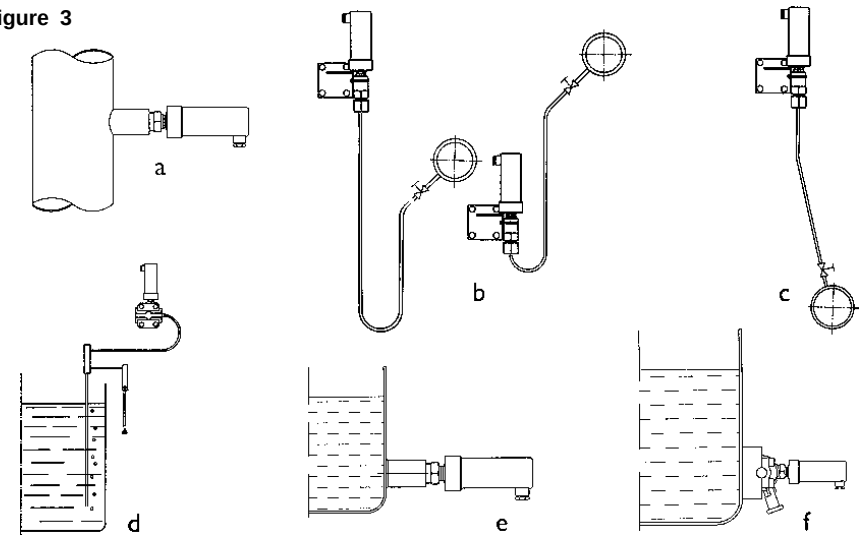

a. Installation of pressure transmitter HG
b. Steam and liquid pressure measurement
c. Gas pressure measurement with pressure transmitter HT
d. Level measurement using the bubbling method
e. Level measurement with pressure transmitter HG
f. Level measurement; installation by means of the PASVE mounting valve

SATRON instruments
Satron Instruments Inc., P.O.Box 240, FIN-33201 Tampere, Finland
Tel. +358 3 387 1800, Telefax +358 3 387 1899

HT PRESSURE TRANSMITTER

HT pressure transmitter belongs to the series H-transmitters which will have both analog and smart properties.
HT is used for 0-1.45 bar...0-1000 bar ranges. The transmitter communicates in a 2-wire system. In pressure measuring applications HT-transmitters are used for measuring the pressure of clean gases, steam and non-crystallizing liquids.The transmitter's sensor is piezoresistive. The rangeability on Smart option is 15:1. The transmitter communicates digitally using the HART® protocol.

TECHNICAL SPECIFICATIONS

Measuring range and span
See Selection Chart.
Zero and Span adjustment
Zero elevation: Calibrated span is freely selectable on the specified range depending from the desired option. This can be made by using extern control shafts (analog option), keyboard (display option) or HART®275 communicator.
Damping
- Smart (code **S**, **D** and **R)**
Time constant is continuously adjustable 1 to 60 s.
- Analog (code **A** and **K)**
Time constant is continuously adjustable
- min.range: 0.3 to 6 s
- max.range: 0.01 to 1 s
Temperature limits
Ambient: -30 to +80 °C
Process: -30 to +120 °C
Shipping and storage: -40 to +80 °C.
Pressure limits Min. and max. process pressure: See the appended tables.
Volumetric displacement
< 0.5 mm^3 /max. span
Output 2-wire (2W), 4-20 mA, user selectable for linear, square root, inverted signal or the transfer function (16 points)specified by the user
Supply voltage and permissible load
See the load capacity diagram;
- Smart (code **S**, **D** and **R)**
4-20 mA output: 11.3-40 VDC.
- Analog (code **A** and **K)**
4-20 mA output: 12-60 VDC.
Humidity limits
0-100 % RH; freezing of condensed water not allowed in reference pressure channels.

PERFORMANCE SPECIFICATIONS
Tested in accordance with IEC770: Reference conditions, specified span, no range elevation, horizontal mounting; AISI316L diaphragm, silicone oil fill.

Accuracy
- Smart (code **S**, **D** and **R)**
±0.1 % of calibrated span
(span 1:1-7.5:1 /max.range).
On the measuring ranges 7.5:1-15:1:

$$\pm[0.01+0.012 \times \left(\frac{\text{max.span}}{\text{calibrated span}}\right)]\% \text{ of calibrated span}$$

- Analog (code **A** and **K)**
±0.2 % of calibrated span
(incl. nonlinearity, hysteresis and repeatability)

[1] Parts in contact with process medium

Long-term stability
±0.25 %/max. span/12 months
Temperature effect on compensated temperature ranges -20...+80 °C
Zero and span shift:
Smart: ±0.25 % of max. span
Analog HT6 and HT7:
±1.3 % of max. span
Analog HT8:
±0.75 % of max. span

Mounting position effect
(**HT6** and **HT7**)
Zero error < 0.15 kPa, which can be calibrated out.
HT8: mounting position has no effect
Vibration effect (IEC 68-2-6: FC):
±0.1 % of measuring range/
2g/10 to 2000 Hz
4g/10 to 100 Hz
Power supply effect
< ±0.01 of calibrated span per volt

EMC-test standards
GENERIC EMISSION STANDARD:
EN 50081 - 2: 1993
Normative reference:
EN 55022:1987/class A
GENERIC IMMUNITY STANDARD:
EN 50082 - 2: 1995
Normative references:
EN 61000-4-2, -4, -5, -8, -11
ENV 50140, ENV 50204, ENV 50141
Insulation test voltage
500 V rms 50 Hz

CONSTRUCTION AND CALIBRATION
Materials
Diaphragm [1]: AISI316L, Hast. C276 or Titanium (HT8).
Other sensing element materials: AISI316, SIS 2343.

Filling fluid: Silicone oil or inert oil (HT6 and HT7)

Enclosure class IP66

Housing with PLUG connector, A and **H**
Housing: AISI316 or Aluminium alloy (Nickel-Chrome coating)
Seals: Viton and NBR
TEST jacks: MS358Sn/PVDF, protected with silicone rubber shield.
PLUG connector: PA6-GF30 jacket, Silicone rubber seal, AISI316 retaining screw.
Housing with junction box/terminal strip, B and **M**
Housing: AISI316 or Aluminium alloy (Nickel-Chrome coating); Seals: Nitrile and Viton; Nameplates: Polyester
Connection hose between sensing element and housing (codes **L** and **K**): PTFE hose with AISI316 braiding.

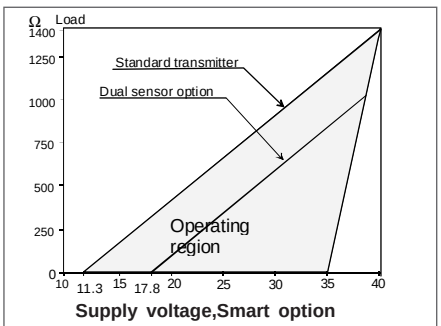

Supply voltage,Smart option
(codes **S, D** and **R**)/V

Min. load using HART® communication 250 Ω

$$R\ max = \frac{\text{Supply voltage - 11.3 V (17.8 V dual sensor option)}}{I\ max}$$

I max = 20.5 mA using HART® communication

I max = 23 mA (when the alarm current 22.5 mA is on)

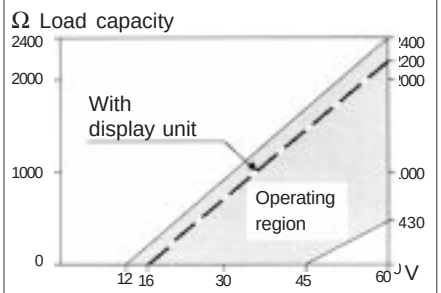

Supply voltage,Analog option(codes **A** and **K**)/V

Pressure limits

Maximum process pressure, bar

Trans-mitter type	Max. overload pressure	Pressure class
HT6 HT7 HT8	75 250 1000	PN100 PN250 PN1000

Minimum process pressure
(HT8: no min. pressure limitations)

$T_{proc.}$ °C	Minimum pressure for different fill fluids (mbar, abs.) DC200 100 cSt	Inert oil
20	50	80
40	80	100
80	160	280
120	210	530

Satron Instruments Inc., P.O.Box 240, FIN-33201 Tampere, Finland
Tel. +358 3 387 1800, Telefax +358 3 387 1899

HT PRESSURE TRANSMITTER

Calibration

For customer-specified range with minimum damping. (If range is not specified, transmitter is calibrated for maximum range.)

Electrical connections

Housing with PLUG connector, **A** and **H:**
PLUG connector, connector type DIN 43650 model AF; Pg9 gland for cable; wire gross-section 0.5 to 1.5 mm^2.

Housing with junction box/terminal strip**,** **B** and **M:**
Pg13.5, 1/2-NPT inlet; screw terminals for
0.5 to 2.5 mm^2 wires, code **M**
0.4 to 0.8 mm^2 wires, code **B**.

Weight

Transmitter
- with housing types **H** and **B**: 1 kg
- with housing type **M**: 1.3 kg
- with housing type **A**: 0.9 kg

Dimensions
(in mm)

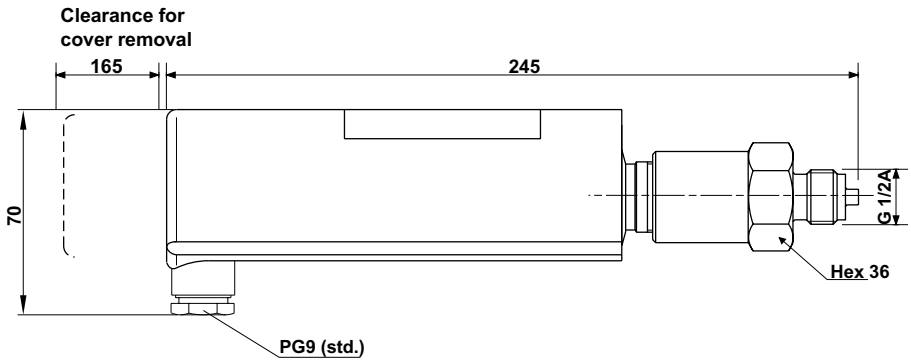

Housing type **H,** AISI316

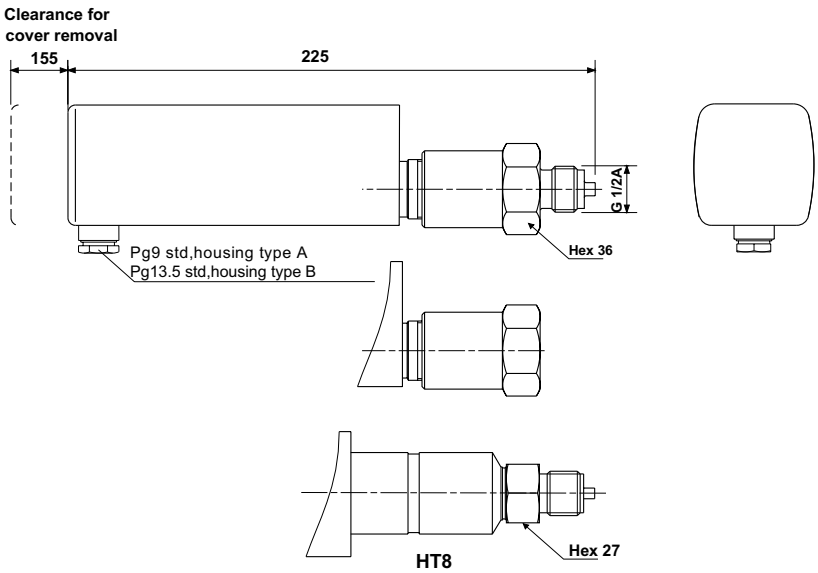

Housing types **A** and **B,** Aluminium alloy

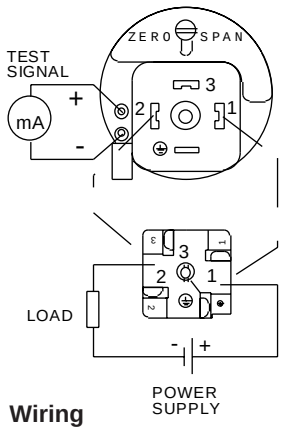

Wiring
Analog option, housing **H** (AISI316)

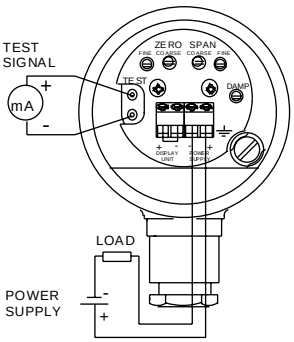

Wiring
Analog option, housing **M** (AISI316)

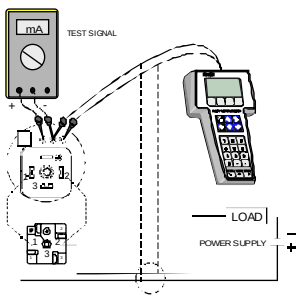

Wiring
Smart option, housing **H** (AISI316)

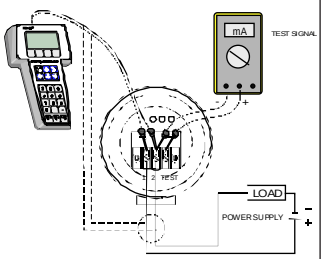

Wiring
Smart option, housing **M** (AISI316)

HT PRESSURE TRANSMITTER

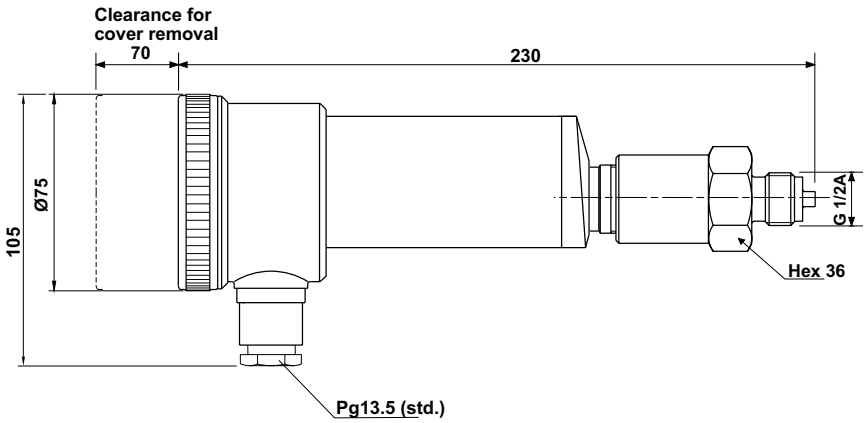

Housing type **M,** AISI316

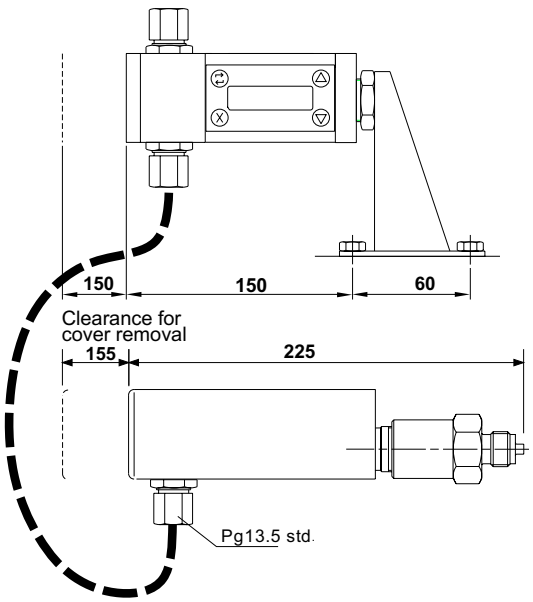

Remote electronics, connecting cable without protection hose, code **R**

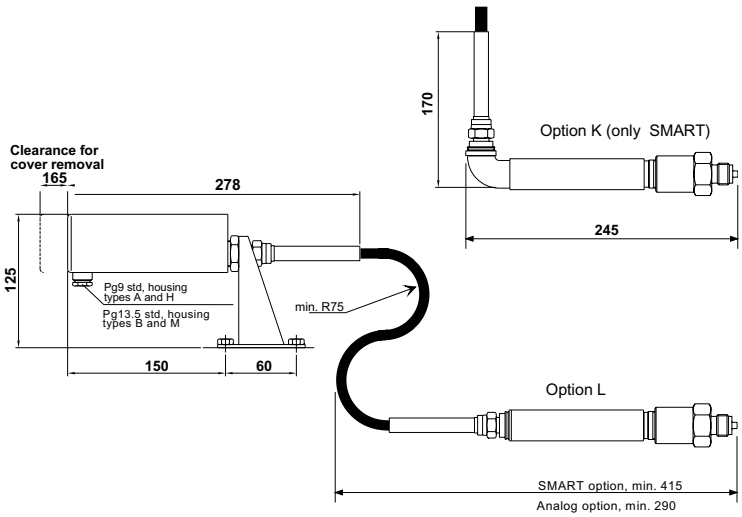

Remote electronics,
connecting cable with protection hose,
codes **L** and **K**

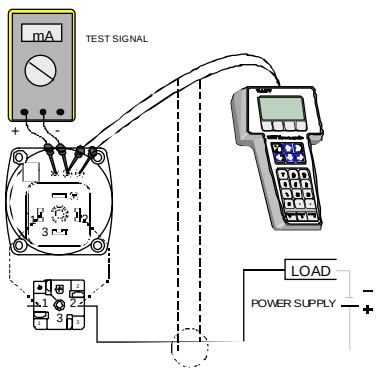

Wiring
Smart option, housing **A**
(Aluminium alloy)

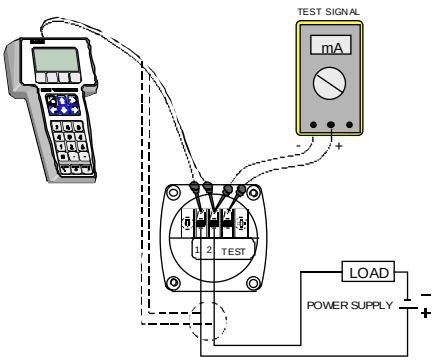

Wiring
Smart option, housing **B**
(Aluminium alloy)

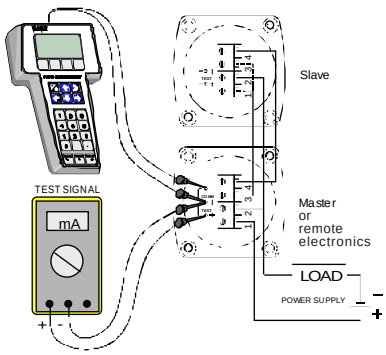

Wiring
Dual Sensor Option

HT PRESSURE TRANSMITTER

Selection Chart

Adjustability	Span **Smart**, min.	Span **Analog**, min.	Span max.	Measuring range
HT6	1.45 bar (0.15 MPa)	2.9 bar (0.29 MPa)	22 bar (2.2 MPa)	-1...+22 bar (-0.1...+2.2 MPa)
HT6A	1.45 bar (0.15 MPa)	2.9 bar (0.29 MPa)	22 bar (2.2 MPa)	0...+22 bar (0...+2.2 MPa),abs.
HT7	10 bar (1.0 MPa)	20 bar (2 MPa)	150 bar (15 MPa)	0...+150 bar (0...+15 MPa),abs.
HT8	67 bar (6.7 MPa)	132 bar (13.2 MPa)	1000 bar (100 MPa)	-1...+1000 bar (-0.1...+100 MPa),abs.

Output **A** 4-20 mA DC **K** 4-20 mA DC (inverse) **S** 4-20 mA DC/Digital HART Protocol
D 4-20 mA DC/with dual sensor/Digital HART Protocol (only housing type **B**)
R 4-20 mA DC/remote electronics,connect.cable without protection hose/Digital HART Protocol(only hous. **B**)

Process connection **1** G 1/2A (male) **2** 1/2-NPT (male) **3** G1/2 (female) **4** 1/2-NPT (female)

Wetted materials

body code	material	**diaphragm** code	material
2	AISI316L	**2**	AISI316L
3	Hast.C 276	**3**	Hast.C 276
		6	Titanium (HT8)

Fill fluid (specify for types HT6 and HT7) **S** Silicone oil **G** Inert oil

Housing type
H Housing (AISI316) with plug connector, DIN 43650, no display, inlet PG9
M Housing (AISI316), with junction box/terminal strip, no display, inlet PG13.5
A Housing (Aluminium alloy) with plug connector, DIN 43650,with display (only smart),inlet PG9
B Housing (Aluminium alloy) with junction box/terminal strip, with display(only smart),inlet PG13.5

Explosion proof **0** No explosion proof classification

☐☐☐☐☐☐☐ / ☐ / ☐☐☐ / ☐☐☐

Special size of electrical inlet
N 1/2 NPT **M** M20 x 1.5 (only housing codes **B** and **M**)
T Pg 16 (housing codes **B** and **M**)
G Pg13.5 (housing codes **A** and **H**)

Special features

Special electronics (specify only if housing connected with hose to sensing element)
- connecting cable with protection hose (output code **A**, **K**, **S** and **D**)
L Hose protected with PTFE/AISI316 braiding, straight
K Hose protected with PTFE/AISI316 braiding, angle of 90º, only Smart
- connecting cable without protection hose (output code **R**)
0 Connecting cable will not be delivered with the transmitter
P Connecting cable will be delivered with the transmitter

Length of cable between sensing element and housing
(specify only if housing connected with cable to sensing element)
2 2 m cable **3** 3 m cable etc. (max. 20 m)

Mounting parts for remote electronics
0 No mounting parts **1** Mounting parts

Documentation

Calibration Certificate **AE** English

Installation and Operating Instructions **IE** English **IF** Finnish

Material Certificates
0 No material certificate
MC1 Raw materials certificate without appendixes, in accordance with SFS-EN 10204-2.1 (DIN 50049-2.1) standard
MC2 Raw materials certificate for wetted parts with appendixes, in accordance with SFS-EN 10204-2.2 (DIN 50049-2.2) standard
MC3 Raw materials certificate for wetted parts with appendixes, in accordance with SFS-EN 10204-3.1B (DIN 50049-3.1B) standard

CE
MEETS THE COUNCIL OF THE EUROPEAN UNION DIRECTIVE 89/336/EEC FOR ELECTROMAGNETIC COMPATIBILITY REQUIREMENTS.

SATRON instruments

Differential pressure measurement

Our instruments for differential pressure measurement:
HD differential pressure transmitter.....Spec. BPdH750

ALSO SUITABLE FOR DIFFERENTIAL PRESSURE MEASUREMENT
HDL differential pressure transmitter .....Spec. BLH830

Points to be considered in the installation of differential pressure transmitters

The transmitter should be mounted at a vibration-free location near the point of measurement, which should be selected in such a way that the effects of disturbance factors are as small as possible.
Some of the most common faults noticed in the selection of the point of measurement:

- Pumps and compressors are too close, producing pronounced pulsations (see page 1/01 for protection against pulsations).
- Pipe blend or valve too close.
- Velocity of flow too high in density measurement.
- Incorrectly chosen points of measurement in level measurement (e.g. at a point where flow occurs).

Section 2/02 gives further instructions for the installation of a transmitter for flow measurement.
When measuring corrosive, viscous, or impure media, a continuous or periodic water purging is employed to protect the transmitter and to keep the measurement piping clean. The flow of the purging water is regulated by means of a miniature rotameter equipped with a needle valve (fig. I a) or, in periodic purging, by means of a solenoid valve.

The purging water is often taken directly from the water mains, and possible impurities or pressure variations in the mains may cause disturbances in purging water supply. In important cases it is advisable to use condensate for purging and to use a separate purging water pump in order to obtain a sufficient and steady pressure. The purging water pipes should be connected as close to the process connection of the measurement piping as possible.

HD **Differential Pressure Transmitter**
HA **Absolute Pressure Transmitter** **(ranges 4 to 7, measuring range 0...xx, abs.)**

	Adjustability (±)			
	Span			Measuring range
	Smart, min.	**Analog**, min.	max.	
2	1 mbar (0.1 kPa)	1.4 mbar (0.14 kPa)	10 mbar (1 kPa)	-10...+10 mbar (-1...+1 kPa)
3	4.2 mbar (0.42 kPa)	8.4 mbar (0.84 kPa)	63 mbar (6.3 kPa)	-63...+63 mbar (-6.3...+6.3 kPa)
4	27 mbar (2.7 kPa)	54 mbar (5.4 kPa)	410 mbar (41 kPa)	-410...+410 mbar (-41...+41 kPa)
5	200 mbar (20 kPa)	400 mbar (40 kPa)	3000 mbar (300 kPa)	-3000...+3000 mbar (-300...+300 kPa)
6	1.45 bar (145 kPa)	2.9 bar (290 kPa)	22 bar (2.2 Mpa)	-22...+22 bar (-2.2...+2.2 Mpa)
7	10 bar (1 Mpa)	20 bar (2 Mpa)	150 bar (15 Mpa)	-150...+150 bar (-15...+15 Mpa)

1 Stud coupling, 12 mm dia./R 1/2" male
2 Stud coupling, 12 mm dia./R 1/2" female
4 Stud elbow, 12 mm dia./R 1/4" male
5 Tee, 12 mm dia.
6 Ball valve, R 1/2"
7 Needle valve, R 1/2"
8 Pipe, 12x 1 calibred
9 Needle valve rotameter
10 3-spindle mounting valve

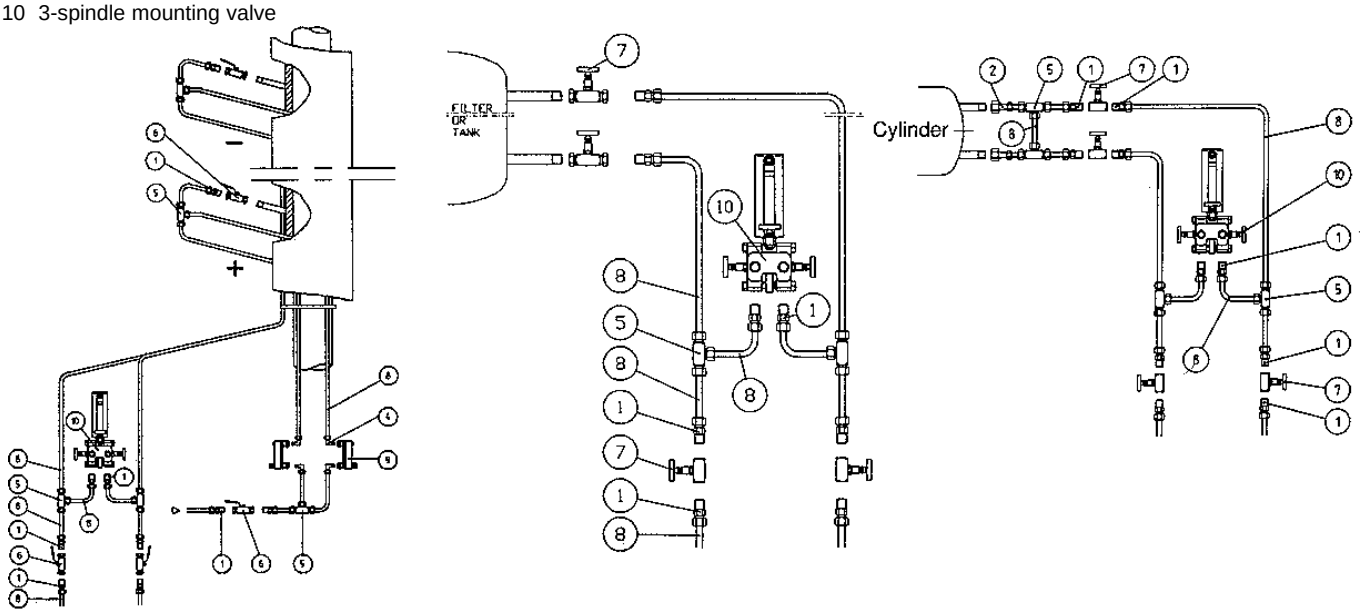

Figure 1 a) b) c)

Satron Instruments Inc., P.O.Box 240, FIN-33201 Tampere, Finland
Tel. +358 3 387 1800, Telefax +358 3 387 1899

HD DIFFERENTIAL PRESSURE TRANSMITTER

HD differential pressure transmitter belongs to H-transmitter family. The series H transmitters have both analog and smart properties. HD is used for 0-1mbar...0-150 bar ranges. The transmitter communicates in a 2-wire system. In pressure measuring applications HD transmitters are used for measuring differential pressure and vacuum pressure. HD transmitter is equipped with an SOS (Silicon On Sapphire) sensing element. The rangeability on Smart option is 15:1. The transmitter communicates digitally using the HART® protocol.

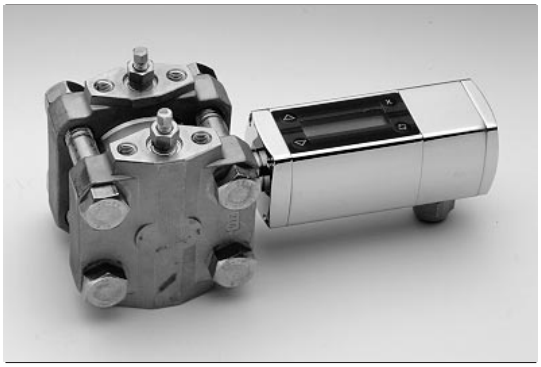

TECHNICAL SPECIFICATIONS

Measuring range and span
See Selection Chart.
Zero and Span adjustment
Zero elevation: Calibrated span is freely selectable on the specified range depending from the desired option. This can be made by using extern control shafts (analog option), keyboard (display option) or HART®275 communicator.
Damping
- Smart (code **S**, **D** and **R)**
Time constant is continuously adjustable 1 to 60 s.
- Analog (code **A** and **K)**
Time constant is continuously adjustable
- min.range: 0.3 to 6 s
- max.range: 0.01 to 1 s

Temperature limits
Sensing element operating:
• -30 to +120 °C
(type HD6 -20 to +120 °C)
Electronics operating: -30 to +80 °C
Shipping and storage: -50 to +80 °C.

Pressure limits
Min. and max. process pressure:

Type	Max. overload pressure (bar)		Pressure class
	CoNi diaphragm	Other diaphragms	
HD2	40	30	PN40
HD3	100	40	PN100
HD4,5	100	60	PN100
HD6	100	100	PN100
HD7	200	200	PN200
*3...5	400	60	PN400
*7	400	400	PN400

* types H and U: See Selection Table.

Transmitter operates within specifications for pressures above 10 mbar abs.

Process chamber volume (cm³)

Type	Volume (cm³)	
	Standard transmitter	With hydraulic seal
HD2	135	-
HD3...7	20	3.30

Process chamber's volumetric displacement

Type	Volumetric displacement (mm³/max. span)	
	Standard transmitter	With hydraulic seal
HD2	800	-
HD3	200	200
HD4	400	400
HD5	470	470
HD6	700	80
HD7	80	80

Output 2-wire (2W), 4-20 mA, user selectable for linear, square root, inverted signal or the transfer function (16 points)specified by the user
Supply voltage and permissible load
See the load capacity diagram;
- Smart (code **S**, **D** and **R)**
4-20 mA output: 11.3-40 VDC.
- Analog (code **A** and **K)**
4-20 mA output: 12-60 VDC.
Humidity limits
0-100 % RH; freezing of condensed water not allowed in reference pressure channels.

PERFORMANCE SPECIFICATIONS
Tested in accordance with IEC770: Reference conditions, specified span, no range elevation, horizontal mounting; CoNi diaphragm, silicone oil fill.

Accuracy
- Smart (code **S**, **D** and **R)**
±0.2 % of calibrated span
(span 1:1-7.5:1 /max.range).
On the measuring ranges 7.5:1-15:1:
$\pm[0.01+0.025 \times (\frac{\text{max.span}}{\text{calibrated span}})]$% of calibrated span
- Analog (code **A** and **K)**
±0.2 % of calibrated span
(incl. nonlinearity, hysteresis and repeatability)

Long-term stability
±0.25 %/max. span for 6 months

Temperature effect on compensated temperature ranges -20 to 80 °C
Zero and span shift: ±1.0 % of max. span, ±2.5 % of min. span
(double for type HD2)

Static pressure effect on Zero of max. span
HD2: ±0.2 % per 40 bar
HD3...7, PN100: ±0.3 % per 100 bar;
PN200: ±0.4 % per 200 bar;
PN400: ±0.6 % per 400 bar.

Overpressure effect on Zero of max. span
HD2, 3: ±1.0 % per 40 bar;
HD4...7: PN100/200: ±0.7 % per 100 bar; PN400: ±2.5 % per 400 bar.

Mounting position effect
Deviation from horizontal position causes a zero shift that can be calibrated out. (Only horizontal position is recommended for type HD2 transmitters.)

Power supply effect
< ±0.01 % of calibrated span per volt.

EMC-test standards
GENERIC EMISSION STANDARD:
EN 50081 - 2: 1993
Normative reference:
EN 55022:1987/class A
GENERIC IMMUNITY STANDARD:
EN 50082 - 2: 1995
Normative references:
EN 61000-4-2, -4, -5, -8, -11
ENV 50140, ENV 50204, ENV 50141

Insulation test voltage
500 V rms 50 Hz

CONSTRUCTION AND CALIBRATION
Materials
Diaphragms [1)]: CoNi alloy, AISI316L or Hast. C276.
Flanges [1)] and vent valves [1)]: AISI316 or Hast. C276.
O-ring on sensing element: PTFE.
Other sensing element materials: AISI316, SIS 2343, SIS 2324.
Mounting bolts and nuts for sensor flanges: AISI316 (PN400: m.8.8.Zne)

Fill fluid
Silicone oil (DC200, 10 cSt) or inert oil.

[1)] Parts in contact with process medium.

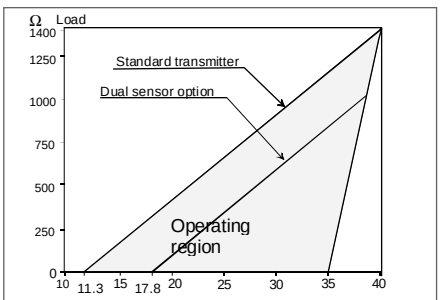

Supply voltage,Smart option (codes **S, D** and **R**)/V

Min. load using HART® communication 250 Ω

$R\ max = \frac{\text{Supply voltage - 11.3 V (17.8 V dual sensor option)}}{I\ max}$

I max = 20.5 mA using HART® communication

I max = 23 mA (when the alarm current 22.5 mA is on)

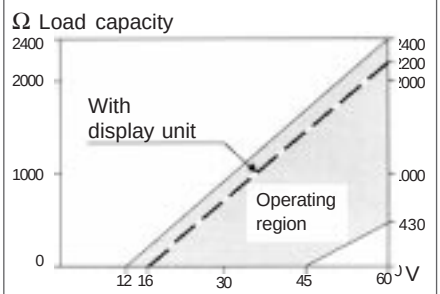

Supply voltage,Analog option(codes **A** and **K**)/V

Satron Instruments Inc., P.O.Box 240, FIN-33201 Tampere, Finland
Tel. +358 3 387 1800, Telefax +358 3 387 1899

HD DIFFERENTIAL PRESSURE TRANSMITTER

Housing with PLUG connector, A and **H**
Housing: AISI316 or Aluminium alloy (Nickel-Chrome coating)
Seals: Viton and NBR
TEST jacks: MS358Sn/PVDF, protected with silicone rubber shield.
PLUG connector: PA6-GF30 jacket, Silicone rubber seal, AISI316 retaining screw.

Housing with junction box/terminal strip, B and **M**
Housing: AISI316 or Aluminium alloy (Nickel-Chrome coating); Seals: Nitrile and Viton; Nameplates: Polyester

Connection cable between sensing element and housing
(codes **L** and **K**):
PTFE hose with AISI316 braiding.

Calibration
For customer-specified range with minimum damping. (If range is not specified, transmitter is calibrated for maximum range.)

Enclosure class: IP66.

Process connections
See Selection Table.

Electrical connections
Housing with PLUG connector, **A** and **H:**
PLUG connector, connector type DIN 43650 model AF; Pg9 gland for cable; wire gross-section 0.5 to 1.5 mm².

Housing with junction box/terminal strip**,**
B and **M:**
Pg13.5, 1/2-NPT inlet; screw terminals for
0.5 to 2.5 mm² wires, code **M**
0.4 to 0.8 mm² wires, code **B**.

Weight (kg)

Type	Housing type	
	A, B and H	M
HD2	8.3	8.7
HD3...7	5.5	5.9
HD3...7 (PN400)	6.9	7.3

Dimensions (in mm)

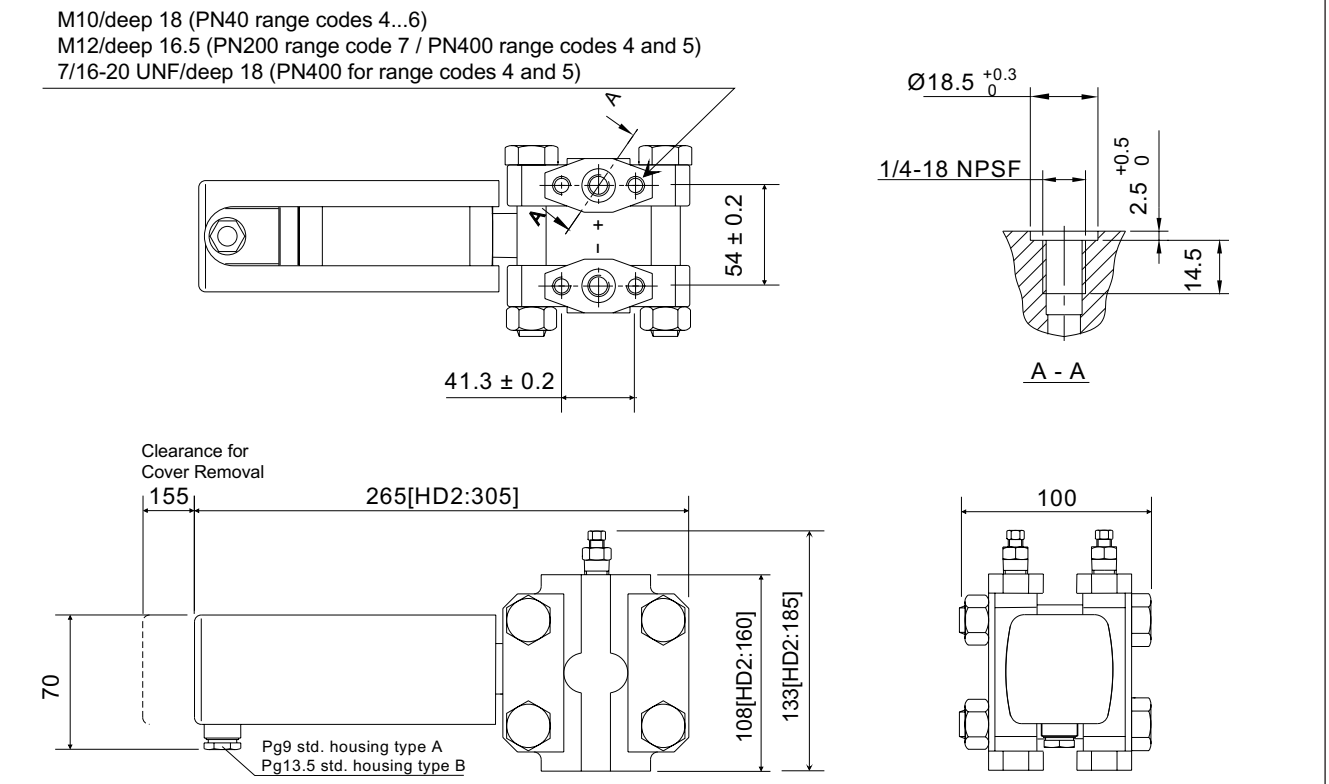

Housing types **A** and **B,** Aluminium alloy

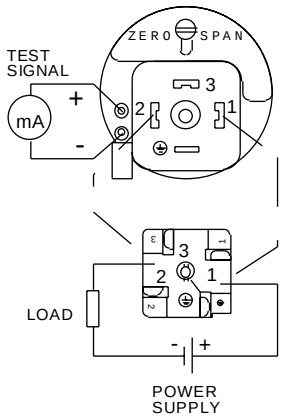

Wiring
Analog option, housing **H** (AISI316)

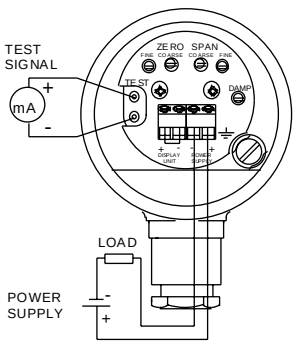

Wiring
Analog option, housing **M** (AISI316)

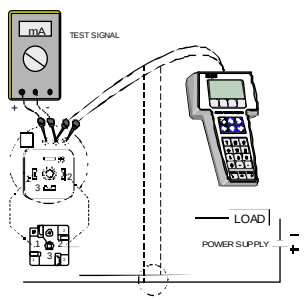

Wiring
Smart option, housing **H** (AISI316)

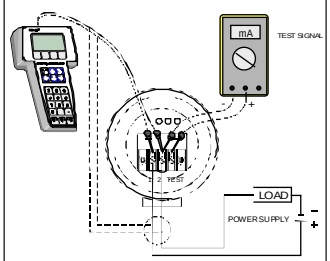

Wiring
Smart option, housing **M** (AISI316)

HD DIFFERENTIAL PRESSURE TRANSMITTER

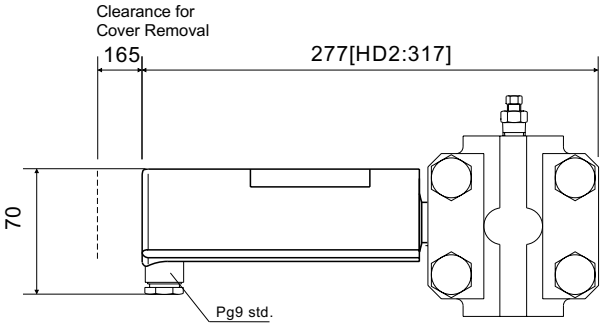

Housing type **H,** AISI316

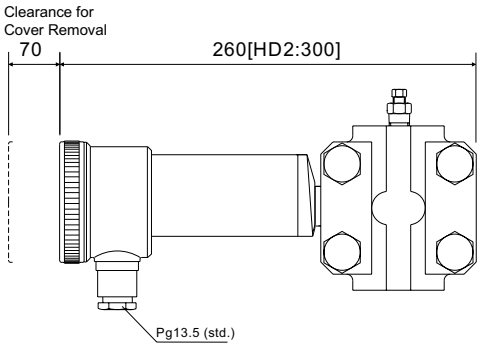

Housing type **M,** AISI316

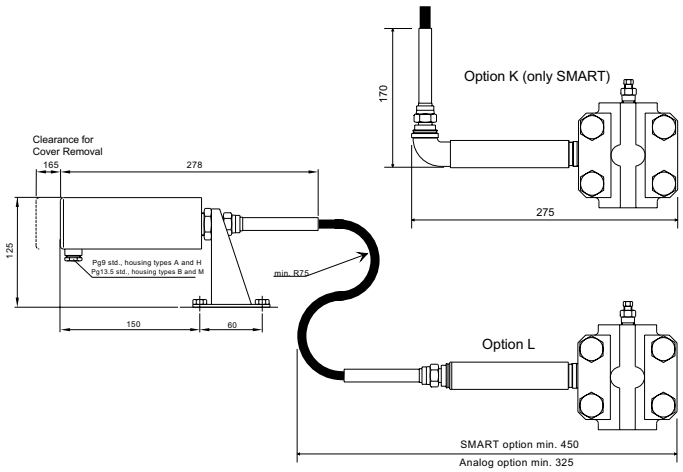

Remote electronics,
connecting cable with protection hose,
codes **L** and **K**

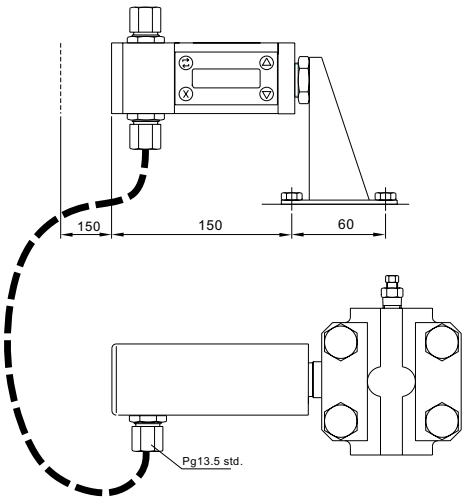

Remote electronics, connecting cable
without protection hose, code **R**

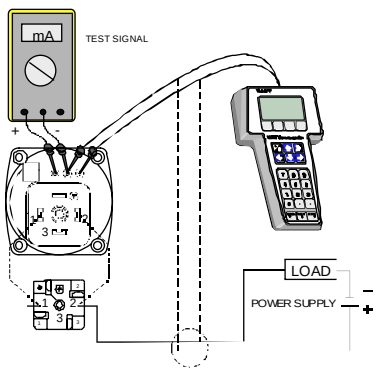

Wiring
Smart option, housing **A**
(Aluminium alloy)

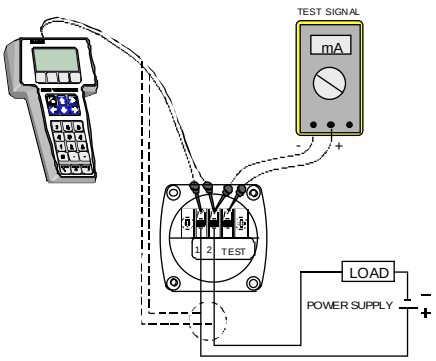

Wiring
Smart option, housing **B**
(Aluminium alloy)

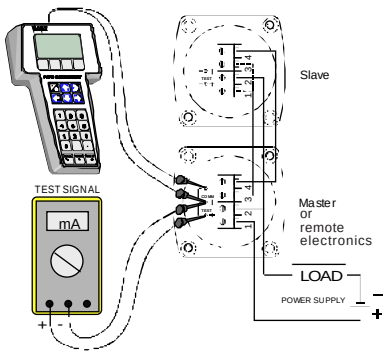

Wiring
Dual Sensor Option

HD DIFFERENTIAL PRESSURE TRANSMITTER

Selection Chart

HD **Differential Pressure Transmitter**
HA **Absolute Pressure Transmitter** **(ranges 4 to 7, measuring range 0...xx, abs.)**

Adjustability (±)

	Span **Smart**, min.	Span **Analog**, min.	Span max.	Measuring range
2	1 mbar (0.1 kPa)	1.4 mbar (0.14 kPa)	10 mbar (1 kPa)	-10...+10 mbar (-1...+1 kPa)
3	4.2 mbar (0.42 kPa)	8.4 mbar (0.84 kPa)	63 mbar (6.3 kPa)	-63...+63 mbar (-6.3...+6.3 kPa)
4	27 mbar (2.7 kPa)	54 mbar (5.4 kPa)	410 mbar (41 kPa)	-410...+410 mbar (-41...+41 kPa)
5	200 mbar (20 kPa)	400 mbar (40 kPa)	3000 mbar (300 kPa)	-3000...+3000 mbar (-300...+300 kPa)
6	1.45 bar (145 kPa)	2.9 bar (290 kPa)	22 bar (2.2 Mpa)	-22...+22 bar (-2.2...+2.2 Mpa)
7	10 bar (1 Mpa)	20 bar (2 Mpa)	150 bar (15 Mpa)	-150...+150 bar (-15...+15 Mpa)

Output **A** 4-20 mA DC **K** 4-20 mA DC (inverse) **S** 4-20 mA DC/Digital HART Protocol
D 4-20 mA DC/with dual sensor/Digital HART Protocol (only housing type **B**)
R 4-20 mA DC/remote electronics,connect.cable without protection hose/Digital HART Protocol(only hous. **B**)

Process connections
D M10,PN40 range 2/PN100 ranges 3 to 6,DIN19213 Teil 1. **H** M12,PN400 ranges 3, 4, 5 and 7,DIN 19213 Teil 2.
U 7/16-20 UNF,(PN400 ranges 3, 4, 5 and 7 only). **F** Screwed flange adapters,PN40 range 2 and PN100 ranges 3 to 6,DIN19213 Teil 1; PN250 range 7,DIN19213 Teil 2.
Z Welded flange adapters,PN400 ranges 3 to 5 and 7,DIN19213. **V** Connection through hydraulic seal.

Wetted materials

Flanges Code	Material	**Diaphragm** Code	Material	**Diaphragm coating** Code	Material
2	AISI316L	**2**	AISI316L (std, range codes 6 & 7)		(specify only when coated)
3	Hast.C 276	**3**	Hast.C 276		
		7	CoNi alloy (std, range codes 2 to 5)	**9**	gold/Rhodium

Fill fluid **S** Silicone oil **G** Inert oil

Housing type
H Housing (AISI316) with plug connector, DIN 43650, no display, inlet PG9
M Housing (AISI316), with junction box/terminal strip, no display, inlet PG13.5
A Housing (Aluminium alloy) with plug connector, DIN 43650,with display (only smart),inlet PG9
B Housing (Aluminium alloy) with junction box/terminal strip, with display(only smart),inlet PG13.5

Explosion proof **0** No explosion proof classification

□□□□□□□□ / □□ / □□□ / □□□

Process thread on flange adapter (only specify for type **F**)

Thread type Code	Type	**Thread size** Code	Size
R	straight R thread	**2**	1/4
N	NPS thread	**3**	3/8
P	taper R thread	**4**	1/2
T	NPT thread		

Special size of electrical inlet
N 1/2 NPT **M** M20 x 1.5 (only housing codes **B** and **M**)
T Pg 16 (housing codes **B** and **M**)
G Pg13.5 (housing codes **A** and **H**)

Special features
Special electronics (specify only if housing connected with hose to sensing element)
- connecting cable with protection hose (output code **A**, **K**, **S** and **D**)
L Hose protected with PTFE/AISI316 braiding, straight
K Hose protected with PTFE/AISI316 braiding, angle of 90º, only Smart
- connecting cable without protection hose (output code **R**)
0 Connecting cable will not be delivered with the transmitter
P Connecting cable will be delivered with the transmitter

Length of cable between sensing element and housing
(specify only if housing connected with cable to sensing element)
2 2 m cable **3** 3 m cable etc. (max. 20 m)

Mounting parts for remote electronics
0 No mounting parts **1** Mounting parts

Documentation

Calibration Certificate **AE** English

Installation and Operating Instructions **IE** English **IF** Finnish

Material Certificates
0 No material certificate
MC1 Raw materials certificate without appendixes, in accordance with SFS-EN 10204-2.1 (DIN 50049-2.1) standard
MC2 Raw materials certificate for wetted parts with appendixes, in accordance with SFS-EN 10204-2.2 (DIN 50049-2.2) standard
MC3 Raw materials certificate for wetted parts with appendixes, in accordance with SFS-EN 10204-3.1B (DIN 50049-3.1B) standard

CE
MEETS THE COUNCIL OF THE EUROPEAN UNION DIRECTIVE 89/336/EEC FOR ELECTROMAGNETIC COMPATIBILITY REQUIREMENTS.

SATRON instruments

Flow measurement

Our instruments for flow measurement:

- **Condensate pot..... Spec. G450**
- **HD differential pressure transmitter..... Spec. BPdH750**

FOR MEASUREMENT IN A PIPE:
HD differential pressure transmitter..... Spec. BPdH750

FOR MEASUREMENT IN AN OPEN CHANNEL:

HG pressure transmitter ..... Spec. BPLH700
HV pressure transmitter ..... Spec. BLH810

Measurement in a pipe by means of restricting element (Fig. 1)

The flow to be measured in a pipe is passed through a restricting device and the pressure differential between two points, one upstream of the restriction and the other immediately downstream from it, is measured by means of a transmitter. (Pressure upstream of the restriction = the high-pressure or positive side, and the pressure downstream = the low-pressure or negative side). The differential pressure Δp thus obtained is proportional to the square of flow Q, i.e.,

$$Q = k\sqrt{\Delta p} \quad (k = \text{constant})$$

For this reason a linearization relay is normally required in a control loop between transmitter and controller. It is also possible to use a transmitter that incorporates square root extraction.

Open channel measurement (Fig. 2)
Open channel measurement is used primarily for liquids that contain impurities (e.g. waste water). Measurement is based on restricting the flow in such a manner that the level rises upstream of the restriction. Level variations are measured with either a bubbling tube or a flanged transmitter (see Liquid level measurement). The signal thus obtained is linearized as follows:

Weir with rectangular opening, and Venturi flume:

$$Q = kh^{3/2} \quad (k = \text{constant})$$

Weir with V opening:

$$Q = kh^{5/2}$$

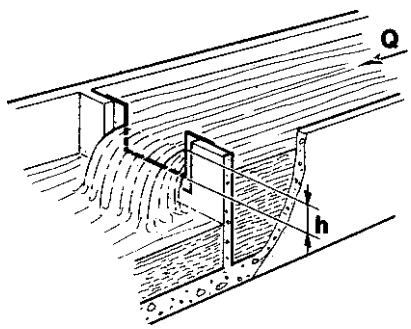

Figure 2

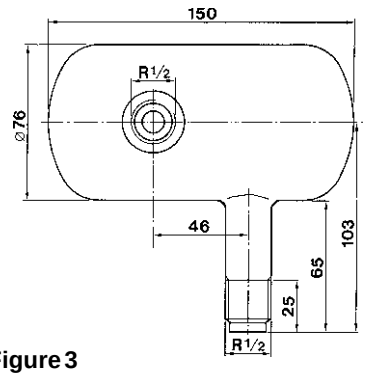

Figure 3

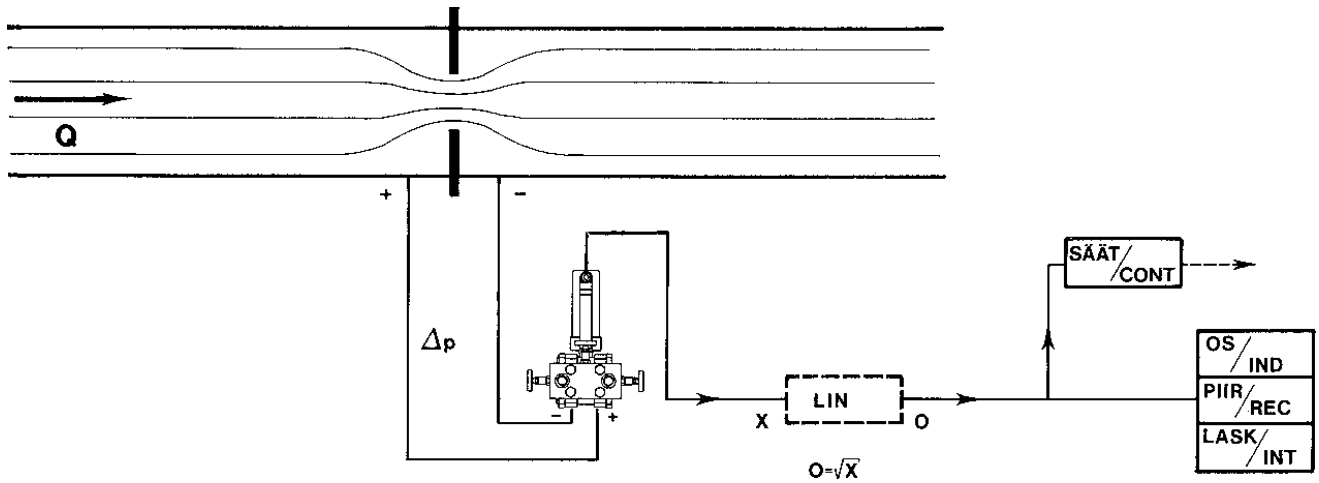

Figure 1

Satron Instruments Inc., P.O.Box 240, FIN-33201 Tampere, Finland
Tel. +358 3 387 1800, Telefax +358 3 387 1899

Figure 5

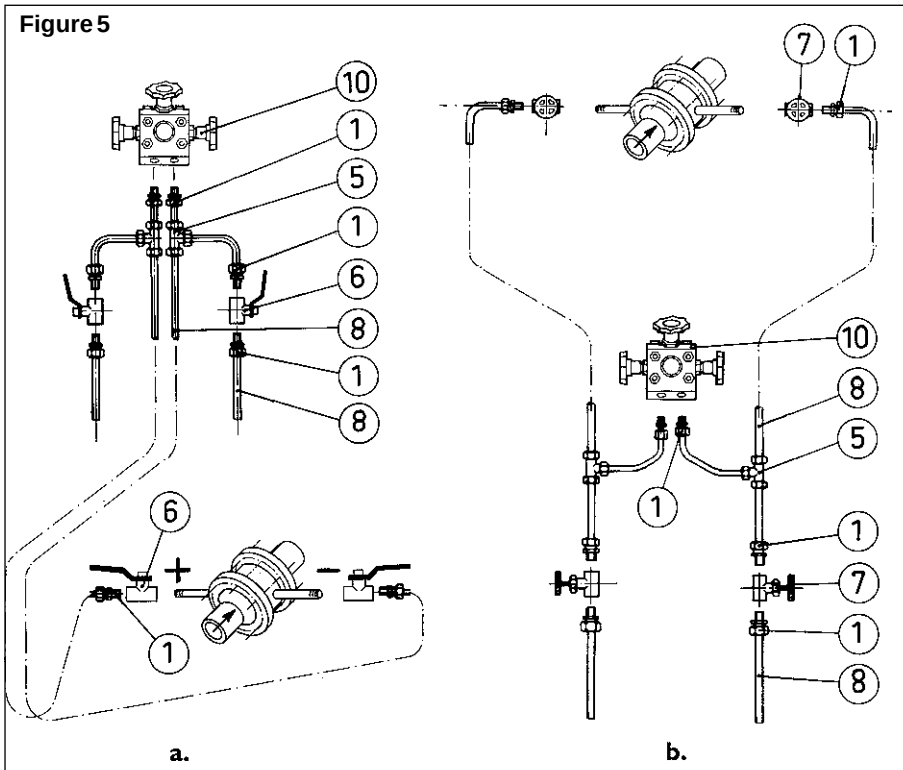

1 Stud coupling, 12 mm dia./R 1/2" male
5 Tee, 12 mm dia.
6 Ball valve, R 1/2"
7 Needle valve, R 1/2"
8 Pipe, 12 x 1 calibred
10 3-spindle mounting valve

Figure 4 Gas flow application

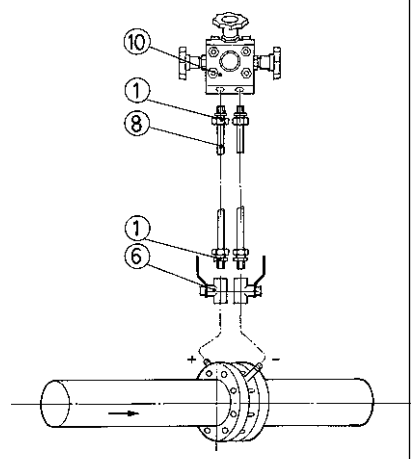

Figure 7

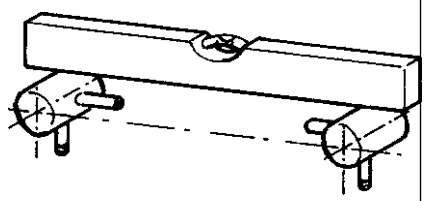

Figure 6

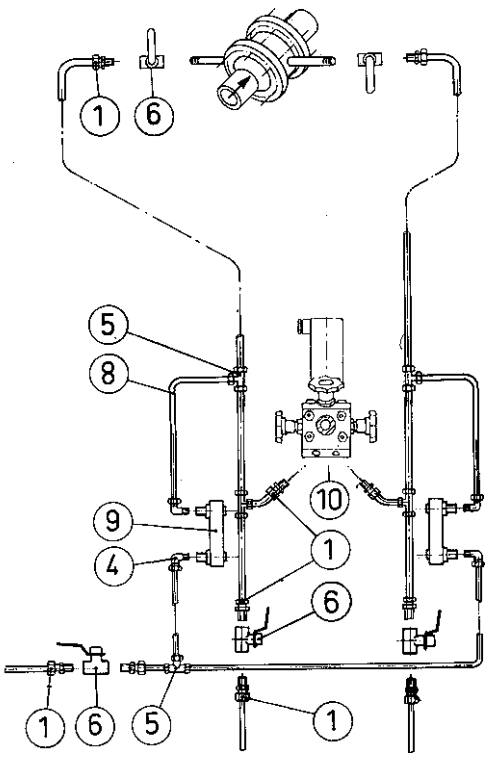

1 Stud coupling, 12 mm dia./R 1/2" male
4 Stud elbow, 12 mm dia./R 1/4" male
5 Tee, 12 mm dia.
6 Ball valve, R 1/2"
8 Pipe, 12 x 1 calibred
9 Needle valve rotameter
10 3-spindle mounting valve

Condensate pot

In steam flow measurement special condensate pots are installed in the immediate vicinity of restricting organ. The connection pipes from the restricting device to the condensate pots are full of steam, and from the condensate pot to the meter full of condensate. The condensate pots must be mounted in such a manner that the liquid levels are the same in them.
The function of the condensate pots is to condensate steam into a liquid (e.g. to protect the transmitter from heat, to prevent dribbling), to keep the liquid levels unaltered with overflow and to collect air. The condensate water transmits the pressure to the transmitter, so that the transmitter itself is not in contact with steam.

Technical specification

Working pressure max.: 64 bar

Max. operating temperature: +400°C

Materials
- gables: H 11 DIN 17155
- pipe: St 35.8/11
- screw socket: Fe 44 BP

Surface handling: silicon painting

Weight: 1.7 kg

Approval of construction
RS 1087 75
RS224276

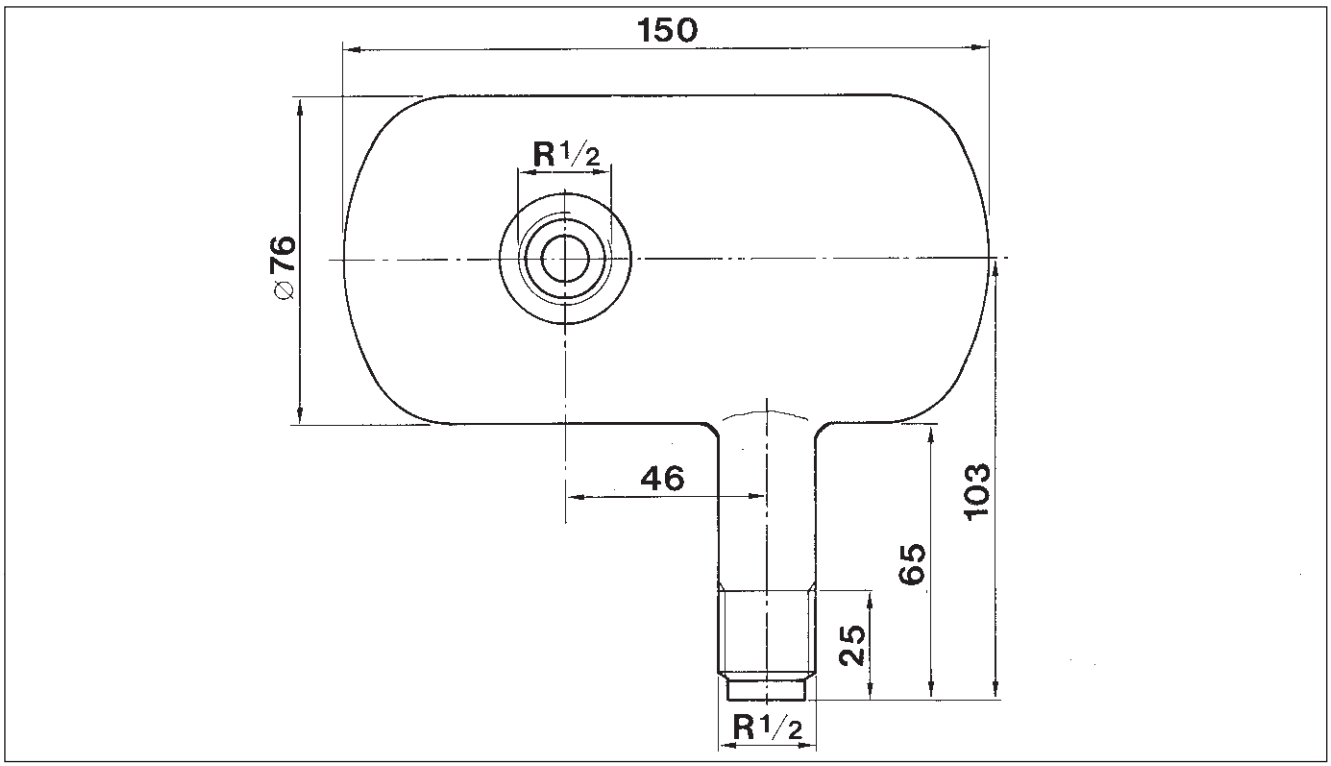

We reserve the right to make technical changes without prior notice.
Performance is indicated in accordance with IEC546 and IEC770 recommendations.

SATRON instruments
Satron Instruments Inc., P.O.Box 240, FIN-33201 Tampere, Finland
Tel. +358 3 387 1800, Telefax +358 3 387 1899

Liquid level measurement

Our instruments for liquid level measurement:

HG pressure transmitter ..... Spec. BPLH700
HV pressure transmitter ..... Spec. BLH810
HL pressure transmitter ..... Spec. BLH820
HDL differential pressure transmitter. Spec. BLH830

ALSO SUITABLE FOR LIQUID LEVEL MEASUREMENT

HD differential pressure transmitter ... Spec. BPdH750

Liquid level measurement using a transmitter

In an open vessel the liquid level is propotional to the hydrostatic pressure in the vessel, and level can be measured by means of pressure measurement. The most commonly used methods are measurement through the side of the vessel by means of a flanged pressure or differential pressure transmitter, as in fig. 2 (the negative leg connection of differential pressure transmitter is left open), and bubbling tube measurement, as in fig. 3. In the latter method compressed air is fed through a monitoring rotameter into a bubbling tube and the back pressure produced in the tube – proportional to liquid level – is measured.
The choice between these two methods, bubbling tube or flanged transmitter, is determined between by the ease of making the process connection and by the likelihood of sedimentation. The bubbling tube is well suited for applications such as level measurement in a stock chest made of cement where, especially at some later date, it would be difficult to install a side connection for a flanged transmitter.
In general a flanged transmitter is suitable for almost any type of vessel. With fluids liable to form sediments the measuring diaphragm can be kept clean by washing it trough a special flushing flange (fig. 1). The flange is installed between the transmitter and the process flange. A continuous or periodic water flow is issued through the flushing bore. If level variations are small and if the fluid is not liable to form sediments, a float type transmitter can be used.
In a pressurized vessel the liquid level can be measured with a flangeless or flanged differential pressure transmitter (fig. 4). When measuring fluids liable to form sediments, a flanged transmitter is equipped with a flushing flange when necessary.
As in open vessel, a float type transmitter can be used for level measurement if there is no risk of sedimentation and if level variations are small.

Calculating the calibration values (fig. 2)
To simplify the calculations, the effect of the density of the gas above the liquid level has been ignored.
s, h, and k = distances as in fig. 2.
d_l = relative density of the liquid with respect to water at 4°c.
d_2 = relative density with respect to water of the fill fluid in the negative leg.
When s, h, and k are expressed in metres, the unit for range elevation, span, and supression is mH_2O; for millimetres the unit is mmH_2O, etc.

Open vessel
Span = $d_l h$
Elevation = $d_l s$
Range = $d_l s$ to ($d_l s + d_l h$

Example:
If
d_l = 1.2, h = 1000 mm, and s = 500 mm,
then span = 1.2 x 1000 mmH_2O = 1200 mmH_2O,
elevation = 1.2 x 500 mmH_2O = 600 mmH_2O,
range = 600 to (600 + 1200) = 600 to 1800 $mmH_2O \approx$ 59 to 177 mbar.

Pressurized vessel
When no fill fluid is used in the negative leg, the calculation is the same as for open vessel. If the negative leg is filled with condensate or some other liquid, then
span = $d_l h$
suppression = $d_l s$ — $d_2 k$
range = ($d_l s$ — $d_2 k$) to ($d_l s$ — $d_2 k$) + $d_l h$

Example:
If
d_l = 0.9, d_2 = 1.0, h = 5m, s = 1 m, and k = 6.5 m, then
Span = 0.9×5 mH_2O = 4.5 mH_2O,
Suppression = (0.9×1 – 1.0×6.5) mH_2O = -5.6 mH_2O,
Range
= -5.6 to (-5.6+4.5) mH_2O
= -5.6 to -1.1 mH_2O
= -549 to -108 mbar.
The minus sign indicates that, when calibrating, the pressure is taken to the negative side of the transmitter.

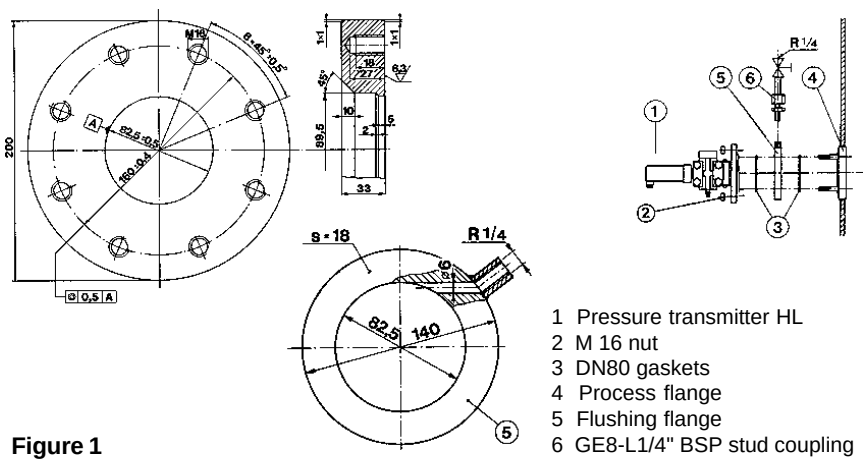

Figure 1

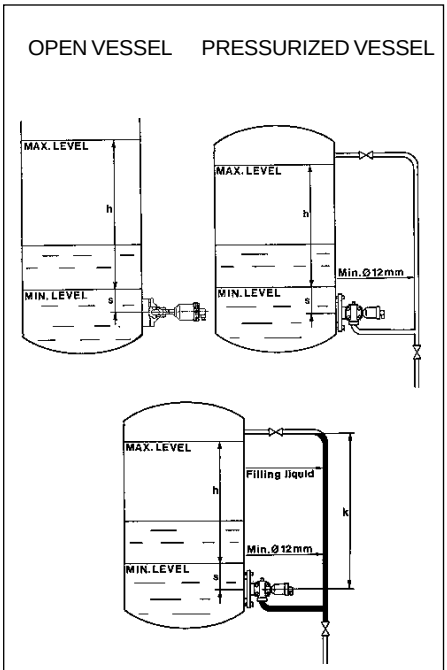

Figure 2

Satron Instruments Inc., P.O.Box 240, FIN-33201 Tampere, Finland
Tel. +358 3 387 1800, Telefax +358 3 387 1899

Installation examples

As regards process connection materials and connection piping, the requirements are the same as in pressure measurement. Figure 1 shows an ordinary flanged transmitter in an open vessel application, with corresponding process flange and flushing flange. Figure 3 shows an installation example for bubbling tube application. Figure 4 illustrates level measurement in a pressurized vessel with flanged transmitter. When measuring liquid level in an open vessel in the same manner, the suppression pipe is not needed.
Bating of the piping system and vessel have to be taken account when selecting the gasket material.
Gasket materials have to be selected in such a way that the eventual bate is not absorbed in the gasket (e.g. Viton)

Figure 4

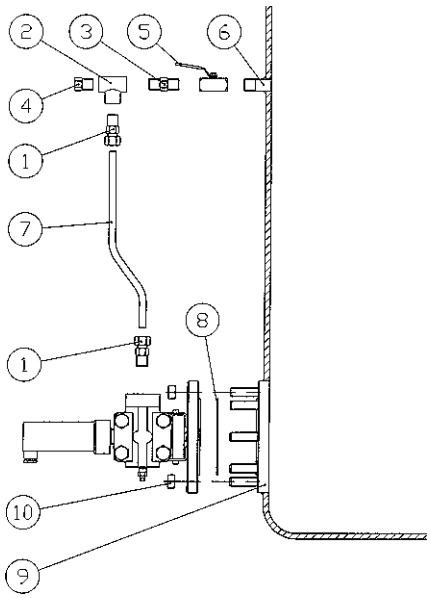

1 Stud coupling, 12 mm dia./R 1/2" male
2 Tee, 12 mm dia.
3 Double male connector, 12 mm dia.
4 Plug
5 Ball valve
6 Process connection, R 1/2"
7 Pipe, 12 x 1 calibred
8 Gasket DN80
9 Flange connection DN80
10 Nut

Liquid level measurement	Adjustability			
	Span			Measuring range
	Smart, min.	**Analog,** min.	max.	
HG4	40 mbar (4kPa)	80 mbar (8 kPa)	600 mbar (60 kPa)	-600...600 mbar (-60...+60 kPa)
HG5	265 mbar (26.5 kPa)	600 mbar (60 kPa)	4000 mbar (400 kPa)	-950...4000 mbar (-95...+400 kPa)
HG6	1.45 bar (0.145 MPa	2.9 bar (0.29 MPa)	22 bar (2.2 MPa)	-1...22 bar (-0.1...+2.2 MPa)
HG6A	1.45 bar (0.145 MPa)	2.9 bar (0.29 MPa)	22 bar (2.2 MPa)	0...22 bar (0...+2.2 MPa), abs.
HG7	10 bar (1 MPa)	20 bar (2 MPa)	150 bar (15 MPa)	0...150 bar (0...+15 MPa), abs.
HL4	40 mbar (4kPa)	80 mbar (8 kPa)	600 mbar (60 kPa)	-600...600 mbar (-60...+60 kPa)
HL5	265 mbar (26.5 kPa)	600 mbar (60 kPa)	4000 mbar (400 kPa)	-950...4000 mbar (-95...+400 kPa)
HL6	1.45 bar (0.145 MPa	2.9 bar (0.29 MPa)	22 bar (2.2 MPa)	-1...22 bar (-0.1...+2.2 MPa)
HL6A	1.45 bar (0.145 MPa)	2.9 bar (0.29 MPa)	22 bar (2.2 MPa)	0...22 bar (0...+2.2 MPa), abs.
HL7	10 bar (1 MPa)	20 bar (2 MPa)	150 bar (15 MPa)	0...150 bar (0...+15 MPa), abs.
HVx4 1)	40 mbar (4kPa)	80 mbar (8 kPa)	600 mbar (60 kPa)	-600...600 mbar (-60...+60 kPa)
HVx5	265 mbar (26.5 kPa)	600 mbar (60 kPa)	2000 mbar (200 kPa)	-950...2000 mbar (-95...+200 kPa)
HDL Differential Pressure Transmitter **HAL Absolute Pressure Transmitter (ranges 4 to 6, measuring range 0...xx, abs.)**				
3	10 mbar (1.0 kPa)	20 mbar (2.0 kPa)	63 mbar (6.3 kPa)	-63...+63 mbar (-6.3...+6.3 kPa)
4	27 mbar (2.7 kPa)	54 mbar (5.4 kPa)	410 mbar (41 kPa)	-410...+410 mbar (-41...+41 kPa)
5	200 mbar (20 kPa)	400 mbar (40 kPa)	3000 mbar (300 kPa)	-3000...+3000 mbar (-300...+300 kPa)
6	1.45 bar (145 kPa)	2.9 bar (290 kPa)	22 bar (2.2 Mpa)	-22...+22 bar (-2.2...+2.2 Mpa)

1) x; See Spec. BLH810

Figure 3

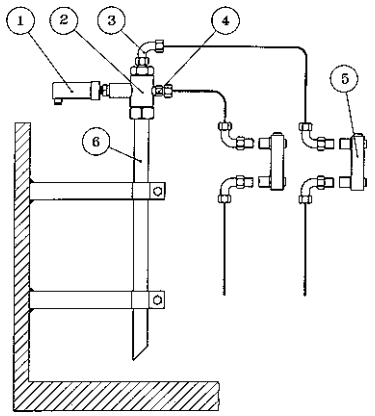

1 Pressure transmitter HG
2 Special fitting
3 Stud elbow WE8-L/1/4"
4 Stud coupling, SF8-L/1/4"
5 Rotameter
6 SS pipe,16 mm dia. x 1 mm

HG PRESSURE TRANSMITTER

HG pressure transmitter belongs to the series H transmitters which will have both analog and smart properties. HG is used for 0-40 mbar...0-150 bar ranges. The transmitter communicates in a 2-wire system. In pressure measuring applications HG-transmitters are used for measuring the pressure of clean, sedimenting, crystallizing and sticking materials.The transmitter's sensor is piezoresistive. The rangeability on Smart option is 15:1. The transmitter communicates digitally using the HART® protocol.

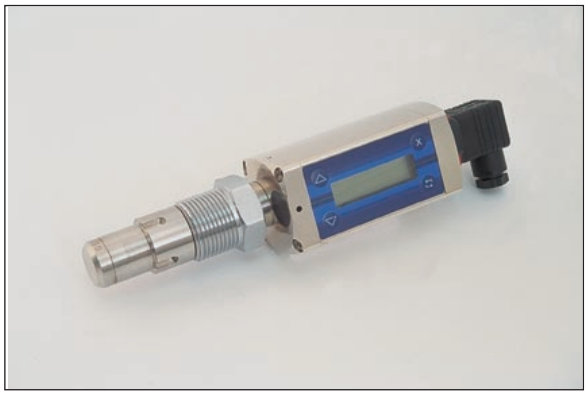

TECHNICAL SPECIFICATIONS

Measuring range and span
See Selection Chart.

Zero and Span adjustment
Zero elevation: Calibrated span is freely selectable on the specified range depending from the desired option. This can be made by using extern control shafts (analog option), keyboard (display option) or HART®275 communicator.

Damping
- **Smart (**codes **S**, **D** and **R)**
  Time constant is continuously adjustable 1 to 60 s.
- **Analog (**codes **A** and **K)**
  Time constant is continuously adjustable
  - min.range: 0.3 to 6 s
  - max.range: 0.01 to 1 s

Temperature limits
Ambient: -30 to +80 °C
Process: -30 to +120 °C
Shipping and storage: -40 to +80 °C.

Pressure limits Min. and max. process pressure: See the appended tables.

Volumetric displacement
< 0.5 mm^3 /max. span

Output 2-wire (2W), 4-20 mA, user selectable for linear, square root, inverted signal or the transfer function (16 points)specified by the user

Supply voltage and permissible load
See the load capacity diagram;
- **Smart (**codes **S**, **D** and **R)**
  4-20 mA output: 11.3-40 VDC.
- **Analog (**codes **A** and **K)**
  4-20 mA output: 12-60 VDC.

Humidity limits
0-100 % RH; freezing of condensed water not allowed in reference pressure channels.

PERFORMANCE SPECIFICATIONS
Tested in accordance with IEC770: Reference conditions, specified span, no range elevation, horizontal mounting; O-ring seals, AISI316L diaphragm, silicone oil fill.

Accuracy
- **Smart (**codes **S**, **D** and **R)**
  ±0.1 % of calibrated span (span 1:1-7.5:1 /max.range).
  On the measuring ranges 7.5:1-15:1:
  $\pm[0.01+0.012 \times (\frac{\text{max.span}}{\text{calibrated span}})]$% of calibrated span
- **Analog (**codes **A** and **K)**
  ±0.2 % of calibrated span
  (incl. nonlinearity, hysteresis and repeatability)

[1] Parts in contact with process medium

Long-term stability
HG4 and HG5
±0.25 %/max. span/6 months
HG6 and HG7
±0.25 %/max. span/12 months

Temperature effect on compensated temperature ranges -20...+80 °C
Zero and span shift:
Smart: ±0.25 % of max. span
Analog HG4 and HG5:
±0.5 % of max. span
Analog HG6 and HG7:
±1.3 % of max. span

Mounting position effect
Zero error < 0.32 kPa, which can be calibrated out.

Vibration effect (IEC 68-2-6: FC):
±0.1 % of measuring range/
2g/10 to 2000 Hz
4g/10 to 100 Hz

Power supply effect
< ±0.01 of calibrated span per volt

EMC-test standards
GENERIC EMISSION STANDARD:
EN 50081 - 2: 1993
Normative reference:
EN 55022:1987/class A
GENERIC IMMUNITY STANDARD:
EN 50082 - 2: 1995
Normative references:
EN 61000-4-2, -4, -5, -8, -11
ENV 50140, ENV 50204, ENV 50141

Insulation test voltage
500 V rms 50 Hz

CONSTRUCTION AND CALIBRATION
Materials
Diaphragm [1]: AISI316L, Hast. C276 or Tantalum.
Coupling [1]: AISI316L or Hast.C276
Other sensing element materials: AISI316, SIS 2343, SIS 2382.

Filling fluid: Silicone oil or inert oil

Enclosure class IP66

Housing with PLUG connector, housing type codes **A** and **H**
Housing: AISI316 or Aluminium alloy (Nickel-Chrome coating)
Seals: Viton and NBR
TEST jacks: MS358Sn/PVDF, protected with silicone rubber shield.
PLUG connector: PA6-GF30 jacket, Silicone rubber seal, AISI316 retaining screw.

Housing with junction box/terminal strip, housing type codes **B** and **M**
Housing: AISI316 or Aluminium alloy (Nickel-Chrome coating); Seals: Nitrile and Viton; Nameplates: Polyester
Connection hose between sensing element and housing (codes **L** and **K**): PTFE hose with AISI316 braiding.

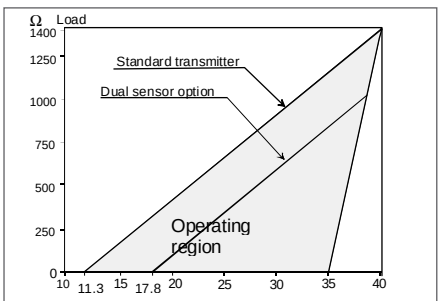

Supply voltage,Smart option (codes **S, D** and **R**)/V

Min. load using HART® communication 250 Ω

$R\ max = \frac{\text{Supply voltage - 11.3 V (17.8 V dual sensor option)}}{I\ max}$

I max = 20.5 mA using HART® communication

I max = 23 mA (when the alarm current 22.5 mA is on)

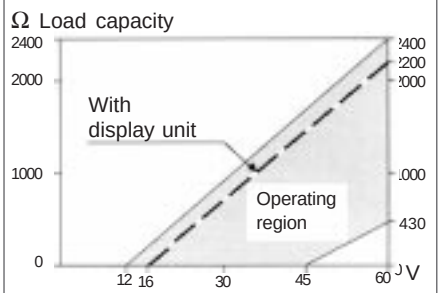

Supply voltage,Analog option(codes **A** and **K**)/V

Pressure limits

Maximum process pressure, bar

Trans-mitter type	Max. overload pressure	Pressure class
HG4	3	PN40
HG5	15	PN40
HG6	75	PN100
HG7	250	PN250

Minimum process pressure

$T_{proc.}$ °C	Minimum pressure for different fill fluids (mbar, abs.)	
	DC200 100 cSt	Inert oil
20	50	80
40	80	100
80	160	280
120	210	530

SATRON instruments
Satron Instruments Inc., P.O.Box 240, FIN-33201 Tampere, Finland
Tel. +358 3 387 1800, Telefax +358 3 387 1899

HG PRESSURE TRANSMITTER

Calibration
For customer-specified range with minimum damping. (If range is not specified, transmitter is calibrated for maximum range.)

Process connections
G1 connecting thread
Process couplings: See Selection Chart and installation instructions or technical specification: Couplings for Transmitters **G150**.

Electrical connections
Housing with PLUG connector, **A** and **H:**
PLUG connector, connector type DIN 43650 model AF; Pg9 gland for cable; wire gross-section 0.5 to 1.5 mm^2.

Housing with junction box/terminal strip, **B** and **M:**
Pg13.5, 1/2-NPT inlet; screw terminals for
0.5 to 2.5 mm^2 wires, code **M**
0.4 to 0.8 mm^2 wires, code **B**.

Weight
Transmitter
- with housing types **H** and **B**: 1 kg
- with housing type **M**: 1.3 kg
- with housing type **A**: 0.9 kg

Dimensions (in mm)

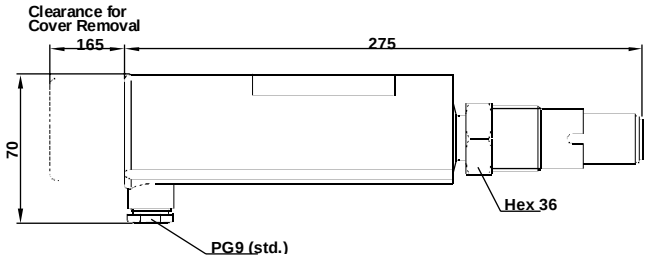

Housing type **H,** AISI316

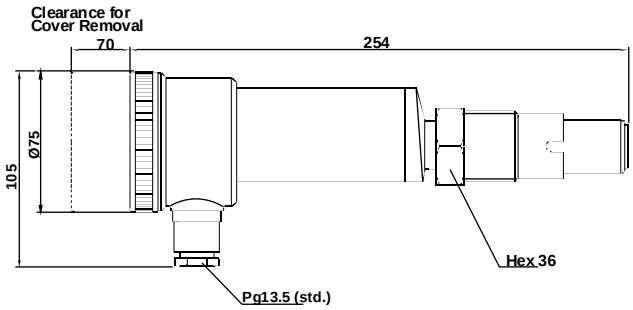

Housing type **M,** AISI316

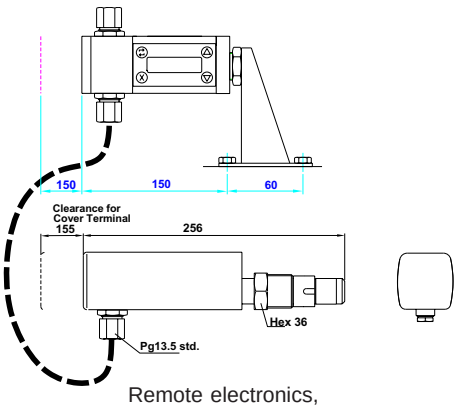

Remote electronics, connecting cable without protection hose, code **R**

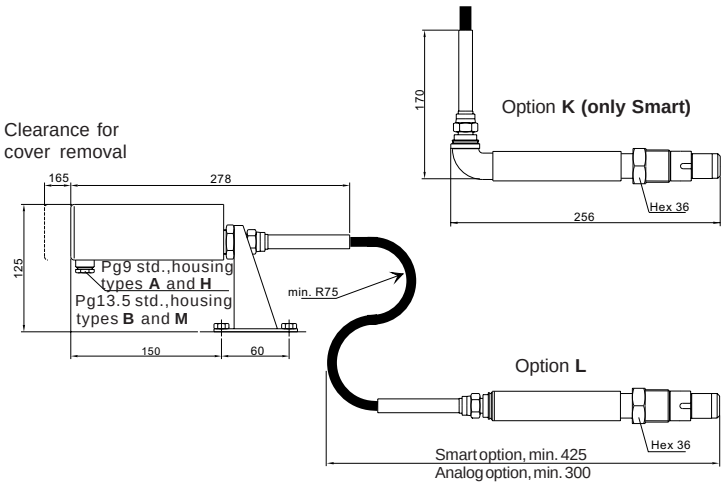

Remote electronics, connecting cable with protection hose, codes **L** and **K**

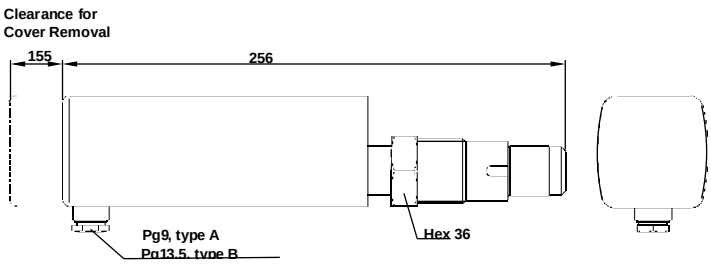

Housing types **A** and **B,** Aluminium alloy

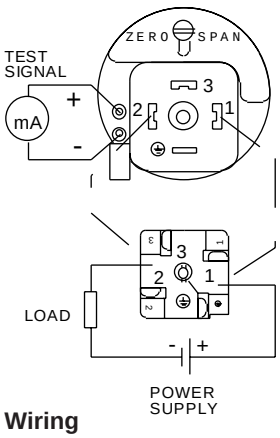

Wiring
Analog option, housing **H** (AISI316)

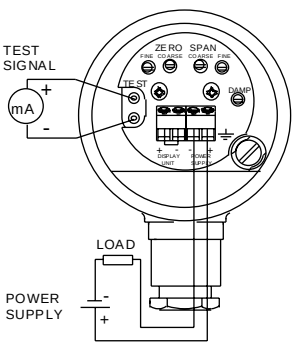

Wiring
Analog option, housing **M** (AISI316)

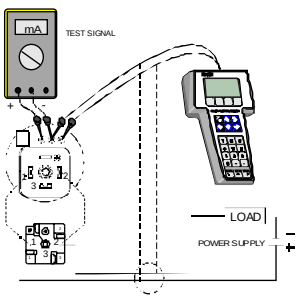

Wiring
Smart option, housing **H** (AISI316)

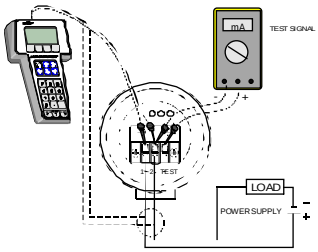

Wiring
Smart option, housing **M** (AISI316)

HG PRESSURE TRANSMITTER

Couplings

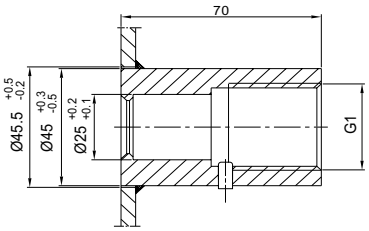

Standard coupling
Material: AISI316 L or Hastelloy C

Special couplings:
G1 hygienic coupling , M548101
G1/2A/G1 coupling, M546190
G1/2A/G1 coupling with venting, M860280
G1/2A/ G1 couplings with bracket:
- G1/2A male, M546195
- G1/2 female, M550393

Transmitter's process sealing

Three different options are available for the transmitter's process sealing:

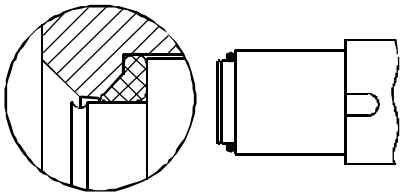

AISI316L diaphragm, Viton O-ring (code **1**)

AISI316L diaphragm, PTFE O-ring (code **2**)

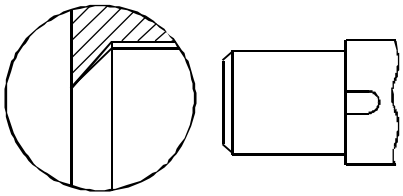

AISI316L, Hastelloy C276 or Tantalum diaphragm, metal/metal taper sealing (diaphragm on sealing face) (code **4**)

Flanges:
Dimensions of flanged couplings, see the installation and setting-up instructions

PASVE mounting & service valve

All PASVE types are also available with pneumatic actuator, flushing and limit switches.

PASVE GF (NF) (Flange type)

GP (NP) (Welded on pipe)

GC (NC) (Welded on container)

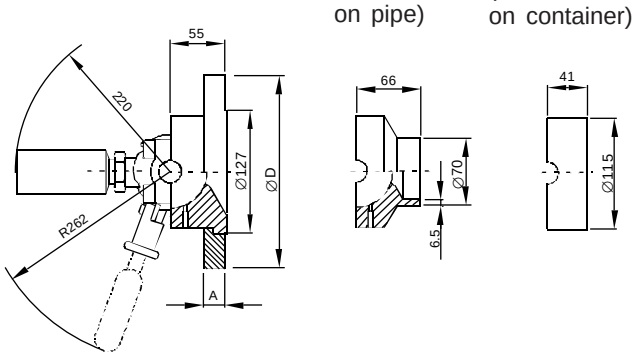

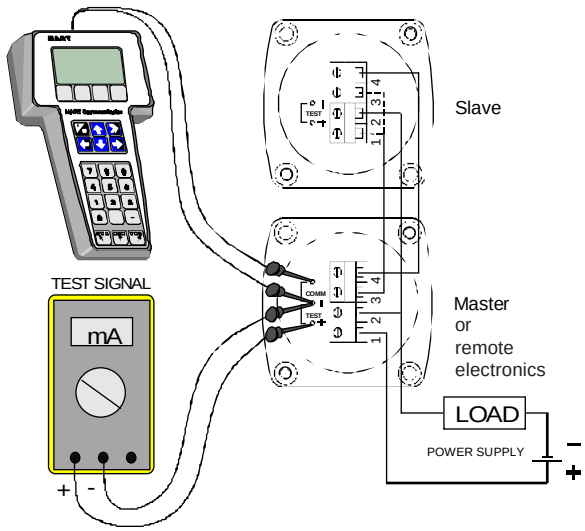

Wiring
Dual Sensor Option

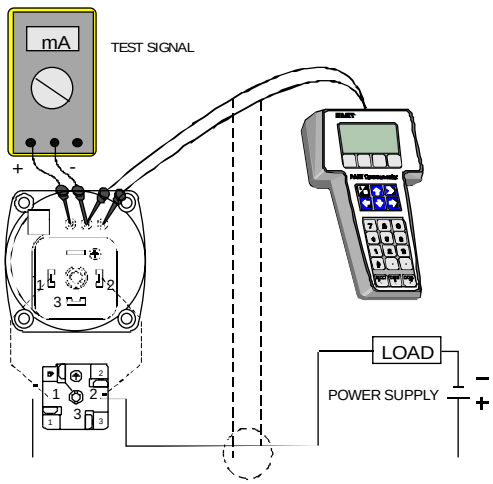

Wiring
Smart option, housing **A**
(Aluminium alloy)

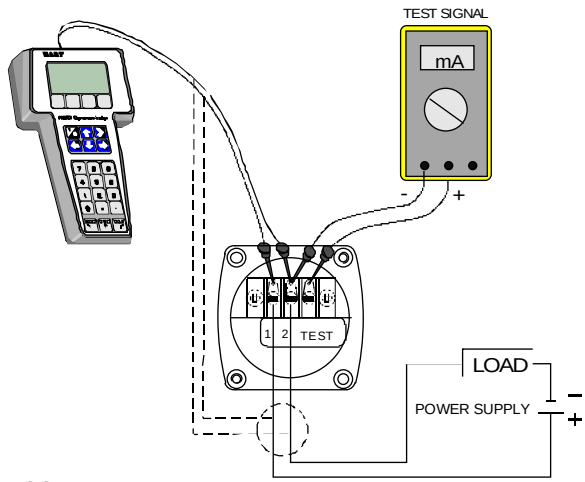

Wiring
Smart option, housing **B**
(Aluminium alloy)

HG PRESSURE TRANSMITTER

Selection Chart

Adjustability	Span **Smart**, min.	**Analog**, min.	Span max.	Measuring range
HG4	40 mbar (4kPa)	80 mbar (8 kPa)	600 mbar (60 kPa)	-600...600 mbar (-60...+60 kPa)
HG5	265 mbar (26.5 kPa)	600 mbar (60 kPa)	4000 mbar (400 kPa)	-950...4000 mbar (-95...+400 kPa)
HG6	1.45 bar (0.145 MPa	2.9 bar (0.29 MPa)	22 bar (2.2 MPa)	-1...22 bar (-0.1...+2.2 MPa)
HG6A	1.45 bar (0.145 MPa)	2.9 bar (0.29 MPa)	22 bar (2.2 MPa)	0...22 bar (0...+2.2 MPa), abs.
HG7	10 bar (1 MPa)	20 bar (2 MPa)	150 bar (15 MPa)	0...150 bar (0...+15 MPa), abs.

Output **A** 4-20 mA DC **K** 4-20 mA DC (inverse) **S** 4-20 mA DC/Digital HART Protocol
D 4-20 mA DC/with dual sensor/Digital HART Protocol (only housing type **B**)
R 4-20 mA DC/remote electronics, connect.cable without protection hose/Digital HART Protocol (only hous.**B**)

Process seal **1** O-ring (Viton) **2** O-ring (PTFE) **4** metal/metal taper

Wetted materials **2** AISI316L **3** Hast.C 276 (only proc.seal code **4**) **5** Tantalum (only proc.seal code **4**)

Fill fluid **S** Silicone oil **G** Inert oil

Housing type
H Housing (AISI316) with plug connector, DIN 43650, no display, inlet PG9
M Housing (AISI316) with junction box/terminal strip, no display, inlet PG13.5
A Housing (Alumin. alloy) with plug connector, DIN 43650,with display (only smart),inlet PG9
B Housing (Alumin. alloy) with junction box/terminal strip,with display (only smart),inlet PG13.5

Explosion proof **0** No explosion proof classification

Process coupling **Material**
0 No coupling **E** Hygienic coupling **2** AISI316L
G Standard coupling **3** Hast.C276
P PASVE mounting valve,specify separately in the order
Specify special couplings separately in the order

Special size of electrical inlet
N 1/2 NPT **M** M20 x 1.5 (only housing codes **B** and **M**)
T Pg 16 (housing codes **B** and **M**)
G Pg13.5 (housing codes **A** and **H**)

Special features

Remote electronics (specify only if housing connected with cable to sensing element)
- connecting cable with protection hose (output code **A**, **K**, **S** and **D**)
L Hose protected with PTFE/AISI316 braiding, straight
K Hose protected with PTFE/AISI316 braiding, angle of 90º, only for Smart transmitter
- connecting cable without protection hose (output code **R**)
0 Connecting cable will not be delivered with the transmitter
P Connecting cable will be delivered with the transmitter

Length of connection cable between sensing element and housing
(specify only if housing connected with cable to sensing element)
2 2 m cable **3** 3 m cable etc. (max. 20 m)

Mounting parts for remote electronics
0 No mounting parts **1** Mounting parts

Documentation

Calibration Certificate **AE** English

Installation and Operating Instructions **IE** English **IF** Finnish

Material Certificates
0 No material certificate
MC1 Raw materials certificate without appendixes, in accordance with SFS-EN 10204-2.1 (DIN 50049-2.1) standard
MC2 Raw materials certificate for wetted parts with appendixes, in accordance with SFS-EN 10204-2.2 (DIN 50049-2.2) standard
MC3 Raw materials certificate for wetted parts with appendixes, in accordance with SFS-EN 10204-3.1B (DIN 50049-3.1B) standard

CE
MEETS THE COUNCIL OF THE EUROPEAN UNION DIRECTIVE 89/336/EEC FOR ELECTROMAGNETIC COMPATIBILITY REQUIREMENTS.

SATRON instruments

HV PRESSURE TRANSMITTER

BLH810
August 2, 1999

HV pressure transmitter belongs to H-transmitter family.
The series H transmitters have both analog and smart properties. HV is used for 0-40 mbar...0-2 bar ranges. The transmitter communicates in a 2-wire system.
HV pressure transmitter is suitable for liquid level measurements in ground and rock tanks, and in open channels and ships' tanks.
HV pressure transmitter can be used in corrosive conditions and to measure contaminating liquids. Possible foam on the surface of the measured liquid does not disturb the measurement. HV does not require compressed air supply.
The transmitter's sensor is piezoresistive. The rangeability on Smart option is 15:1. The transmitter communicates digitally using the HART® protocol.

TECHNICAL SPECIFICATIONS

Measuring range and span
See Selection Chart.
Zero and Span adjustment
Zero elevation: Calibrated span is freely selectable on the specified range depending from the desired option. This can be made by using extern control shafts (analog option), keyboard (display option) or HART®275 communicator.

Damping
- **Smart (**output code **S**, **D** and **R)**
  Time constant is continuously adjustable 1 to 60 s.
- **Analog (**output code **A** and **K)**
  Time constant is continuously adjustable
  - min.range: 0.3 to 6 s
  - max.range: 0.01 to 1 s

Temperature limits
Process: -10 to +80 °C
Ambient: -30 to +80 °C
Shipping and storage: -40 to +80 °C.
Equipment cabinet is recommended for extremely demanding conditions.

Pressure limits
Min. and max. process pressure: See the appended tables.
Output 2-wire (2W), 4-20 mA, user selectable for linear, square root, inverted signal or the transfer function (16 points)specified by the user
Supply voltage and permissible load
See the load capacity diagram;
- **Smart (**code **S**, **D** and **R)**
  4-20 mA output: 11.3-40 VDC.
- **Analog (**code **A** and **K)**
  4-20 mA output: 12-60 VDC.

Humidity limits 0-100 % RH; freezing of condensed water not allowed in reference pressure channels.

PERFORMANCE SPECIFICATIONS
Tested in accordance with IEC770: Reference conditions, specified span, no range elevation,AISI316L diaphragm, silicone oil fill.

Accuracy
- **Smart (**output codes **S**, **D** and **R)**
  - ±0.1 % of calibrated span (span 1:1-7.5:1 /max.range).
    On the measuring ranges 7.5:1-15:1:
    $\pm[0.01+0.012 \times (\frac{\text{max.span}}{\text{calibrated span}})]$% of calibrated span
- **Analog (**output codes **A** and **K)**
  - ±0.2 % of calibrated span
  (incl. nonlinearity, hysteresis and repeatability)

Long-term stability
±0.25 % of max. span per 6 months

Temperature effect on compensated temperature ranges
Zero and span shift: ±0.5 % of max.span

Mounting position effect
Zero error <0.32 kPa, which can be calibrated out.
Vibration effect (IEC 68-2-6: FC):
±0.1 % of measuring range/
2 g/10 to 2000 Hz
4 g/10 to 100 Hz
Power supply effect
<±0.01 % of calibrated span per volt.

EMC-test standards
CENERIC EMISSION STANDARD:
EN 50081 - 2: 1993
Normative reference:
EN 55022:1987/class A
GENERIC IMMUNITY STANDARD:
EN 50082 - 2: 1995
Normative references:
EN 61000-4-2, -4, -5, -8, -11
ENV 50140, ENV 50204, ENV 50141
Insulation test voltage
500 V rms 50 Hz.

CONSTRUCTION AND CALIBRATION
Materials
Diaphragm [1]: AISI316L, Hast. C276 or Tantalum.
Sensing element [1]: AISI316, PTFE/ AISI316 or PVC
Other materials: SIS2343, SIS 2382
Fill fluid Silicone oil or inert oil.

Housing with PLUG connector, A and **H**
Housing: AISI316 or Aluminium alloy (Nickel-Chrome coating)
Seals: Viton and NBR
TEST jacks: MS358Sn/PVDF, protected with silicone rubber shield.
PLUG connector: PA6-GF30 jacket, Silicone rubber seal, AISI316 retaining screw.

[1] Parts in contact with process medium

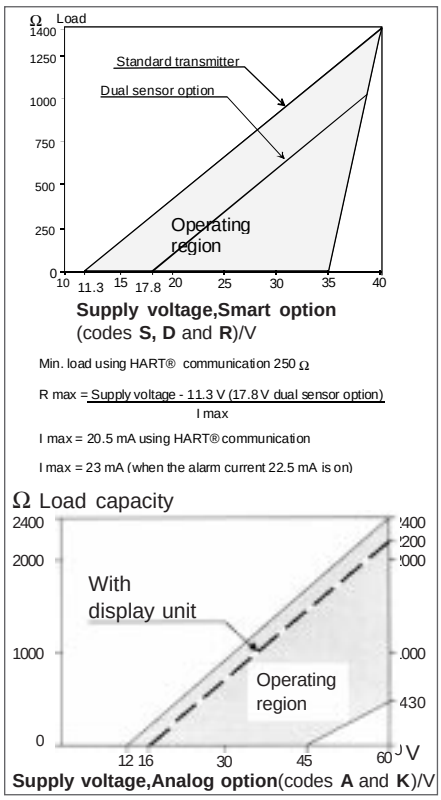

Housing with junction box/terminal strip, B and **M**
Housing: AISI316 or Aluminium alloy (Nickel-Chrome coating); Seals: Nitrile and Viton; Nameplates: Polyester
Connection cable between sensing element and housing
(code **L**):
PTFE hose with AISI316 braiding.

Equipment cabinet Rittal AE1380, Steel cabinet with polyester paint.

Enclosure class: IP66.

Calibration
For customer-specified range with minimum damping. (If range is not specified, transmitter is calibrated for maximum range.)

Pressure limits

Maximum process pressure, bar

Transmitter type	Max. overload pressure	Pressure class
HV...4	3	PN40
HV...5	15	PN40

Minimum process pressure

$T_{proc.}$ °C	Minimum process pressure for different fill fluids(mbar,abs.)	
	DC200 100 cSt	Inert oil
20	50	80
40	80	100
80	160	280

Satron Instruments Inc., P.O.Box 240, FIN-33201 Tampere, Finland
Tel. +358 3 387 1800, Telefax +358 3 387 1899

HV PRESSURE TRANSMITTER

Electrical connections
Housing with PLUG connector, **A** and **H:**
PLUG connector, connector type DIN 43650 model AF; Pg9 gland for cable; wire gross-section 0.5 to 1.5 mm².

Housing with junction box/ terminal strip**, B** and **M:**
Pg13.5, 1/2-NPT inlet; screw terminals for
0.5 to 2.5 mm² wires, code **M**
0.4 to 0.8 mm² wires, code **B**.

Process connections
DN50PN40, DN80PN40, ANSI2" 150 lbs/300 lbs, ANSI3" 150 lbs/300 lbs; clamp mounting on angle bracket
(see INSTALLATION)

Weight (kg):
·**HVF** 2.5 kg
·**HVP** 9.0 kg
·**HVH** 9.5 kg
+ 1 kg/m withPVC protective tube and 3 kg/m with AISI316 protective tube

Dimensional drawings (drawings in mm)

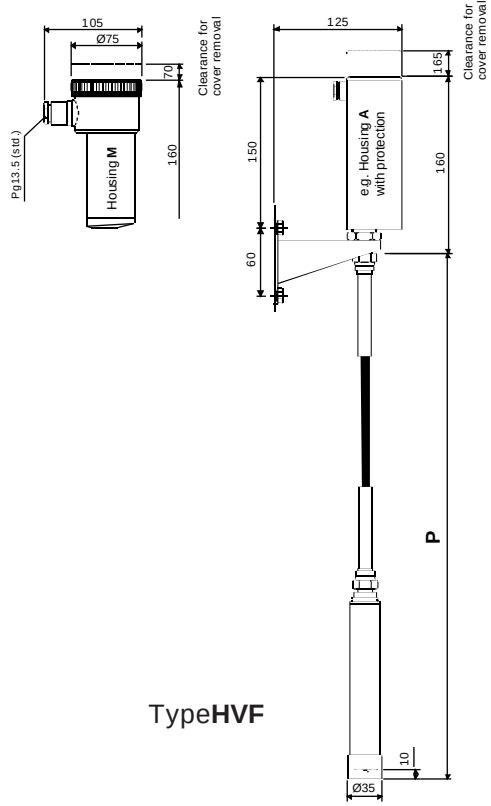

Type**HVF**

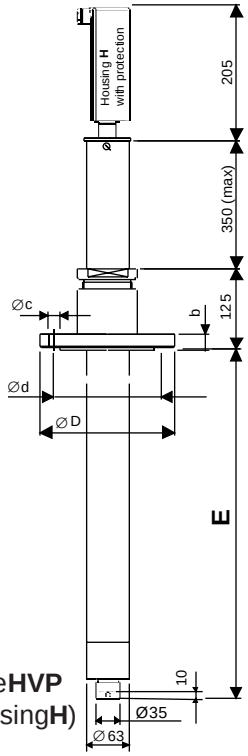

Type**HVP** (housing**H**)

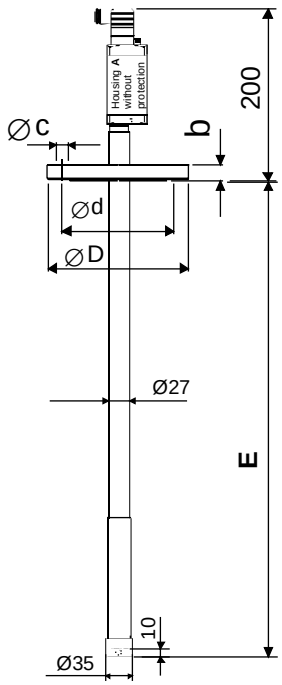

Type**HVH** (housing**A** without protection)

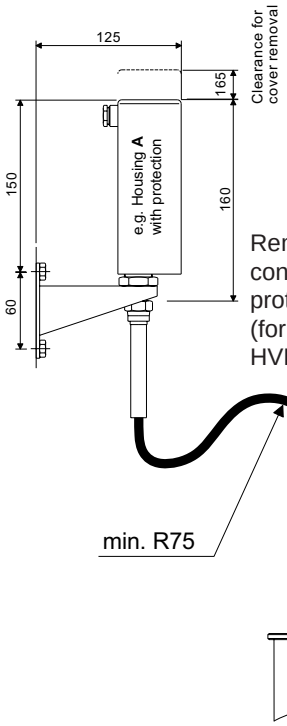

Remote electronics, connecting cable with protection hose, code **L** (for transmitter types HVP and HVH)

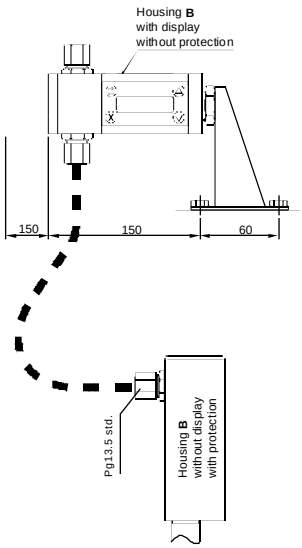

Remote electronics, connecting cable without protection hose, code **R** (for transmitter types HVP and HVH)

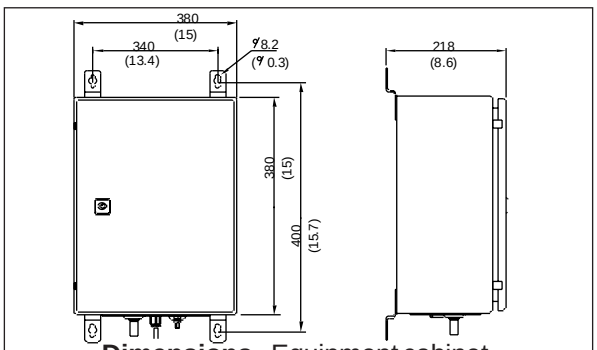

Dimensions - Equipment cabinet

	P/m		E/m	
Type	min.	max.	min.	max.
HVF	1.0	20.0	-	-
HVP	-	-	1.0	5.5
HVH	-	-	1.0	5.5

Flange	Code	ØD	Ød	Øc	b
DN50PN40	E	165	125	4x8	20
DN80PN40	F	200	160	8x8	24
ANSI2"150lb	Y	152	120.6	4x20	23
ANSI2"300lb	Z	165	127	8x20	25
ANSI3"150lb	A	191	152.4	4x20	26
ANSI3"300lb	B	210	168.3	8x23	31

HV PRESSURE TRANSMITTER

Installation methods

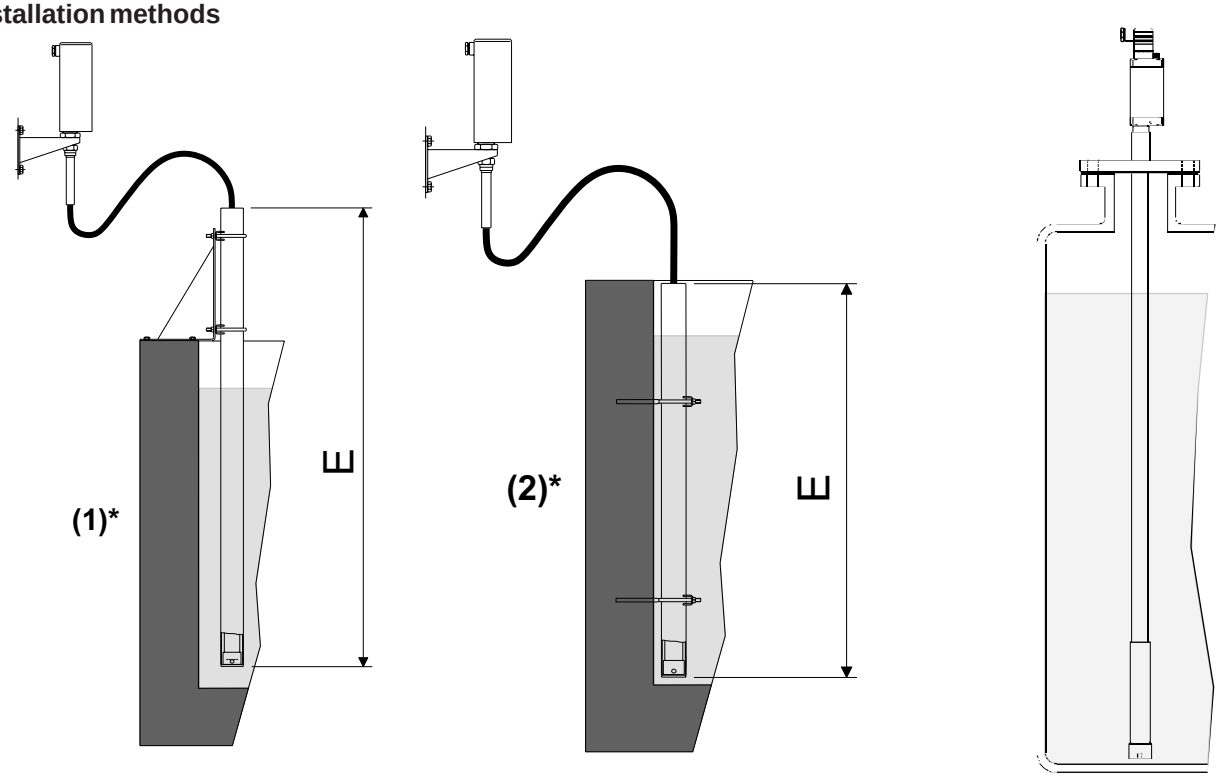

*) See the selection table "Other mounting accessories"

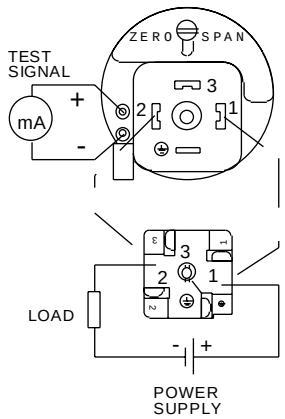

Wiring
Analog option, housing **H** (AISI316)

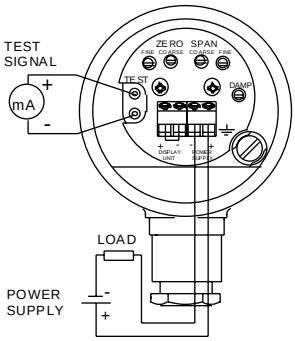

Wiring
Analog option, housing **M** (AISI316)

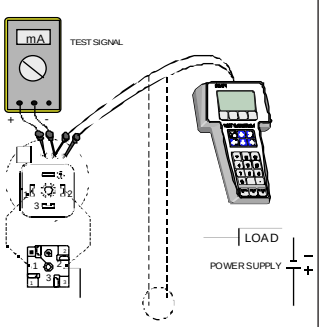

Wiring
Smart option, housing **H** (AISI316)

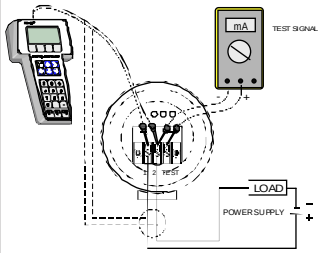

Wiring
Smart option, housing **M** (AISI316)

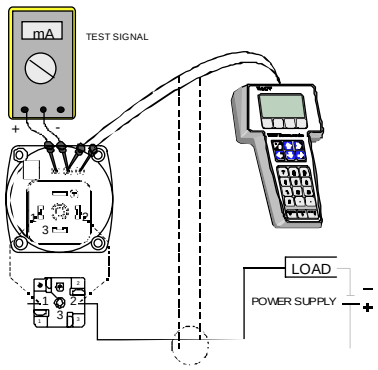

Wiring
Smart option, housing **A** (Aluminium alloy)

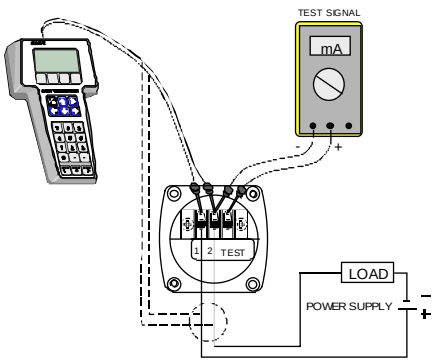

Wiring
Smart option, housing **B** (Aluminium alloy)

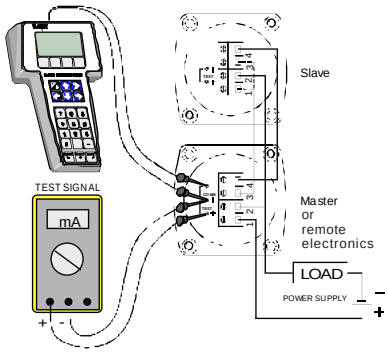

Wiring
Dual Sensor Option

HV PRESSURE TRANSMITTER

Selection Chart

Transmitter types
HVF Flexible PTFE hose (PTFE/AISI316 braiding)
HVP PVC hose/Flange
HVH AISI316L hose/Flange (Fixed mounting tube)

Adjustability	Span **Smart**, min.	Span **Analog**, min.	Span max.	Measuring range
4	40 mbar (4kPa)	80 mbar (8 kPa)	600 mbar (60 kPa)	-600...600 mbar (-60...+60 kPa)
5	265 mbar (26.5 kPa)	600 mbar (60 kPa)	2000 mbar (200 kPa)	-950...2000 mbar (-95...+200 kPa)

Output **A** 4-20 mA DC **K** 4-20 mA DC (inverse) **S** 4-20 mA DC/Digital HART Protocol
D 4-20 mA DC/with dual sensor/Digital HART Protocol (only housing type **B**)
R 4-20 mA DC/remote electronics,connect.cable without protection hose/Digital HART Protocol(only hous. **B**)

Flange **0** No flange **E** DN50 PN40 **F** DN80 PN40 **Y** ANSI 2" 150lbs
Z ANSI 2" 300 lbs **A** ANSI 3" 150 lbs **B** ANSI 3" 300lbs

Wetted materials	Flange Code	Flange Material	Diaphragm Code	Diaphragm Material	Extension
	2	AISI316L	**2**	AISI316L	(type HVF=PTFE/AISI316)
	3	Hast.C 276	**3**	Hast.C 276	(type HVP=PVC)
			5	Tantalum	(type HVH=AISI316)

Fill fluid **S** Silicone oil **G** Inert oil

Housing type
H Housing (AISI316) with plug connector, DIN 43650, no display, inlet PG9
M Housing (AISI316), with junction box/terminal strip, no display, inlet PG13.5
A Housing (Alum.alloy) with plug connector,DIN 43650,with display (only smart),inlet PG9
B Housing (Alum.alloy) with junction box/terminal strip, with display(only smart),inlet PG13.5
C Transmitter with equipment cabinet (for transmitter type HVF and for special electronics)
D Transmitter with equipment cabinet + heating element (for transmitter type HVF and for special electronics)

Explosion proof **0** No explosion proof classification

Length P of PTFE/AISI316 hose between sensing element and housing
(specify for transmitter type HVF)
P10 1.0 m hose
P25 2.5 m hose
...
P200 20.0 m hose

Length E of mounting/protective tube (specify for transmitter type HVP and HVH also with the type HVF if the protective tube is used)
E10 1.0 m hose
E15 1.5 m hose
...
E55 5.5 m hose

□□□□□□□□□□ / □□ / □□□ / □□□

Other mounting accessories
0 No mounting accessories
1 Mounting bracket/Clamps/Protective tube
2 Clamps/Protective tube

Special size of electrical inlet
N 1/2 NPT **M** M20 x 1.5 (only housing codes **B** and **M**)
T Pg 16 (housing codes **B** and **M**)
G Pg13.5 (housing codes **A** and **H**)

Special features

Special electronics (specify only if housing connected with hose to sensing element) for transmitter types HVP and HVH
- connecting cable with protection hose (output code **A**, **K**, **S** and **D**)
L Hose protected with PTFE/AISI316 braiding, straight
- connecting cable without protection hose (output code **R**)
0 Connecting cable will not be delivered with the transmitter
P Connecting cable will be delivered with the transmitter

Length of cable between sensing element and housing
(specify only if housing connected with cable to sensing element)
2 2 m cable **3** 3 m cable etc. (max. 20 m)

Mounting parts for remote electronics
0 No mounting parts **1** Mounting parts

Documentation

Calibration Certificate **AE** English

Installation and Operating Instructions **IE** English **IF** Finnish

Material Certificates
0 No material certificate
MC1 Raw materials certificate without appendixes, in accordance with SFS-EN 10204-2.1 (DIN 50049-2.1) standard
MC2 Raw materials certificate for wetted parts with appendixes, in accordance with SFS-EN 10204-2.2 (DIN 50049-2.2) standard
MC3 Raw materials certificate for wetted parts with appendixes, in accordance with SFS-EN 10204-3.1B (DIN 50049-3.1B) standard

CE
MEETS THE COUNCIL OF THE EUROPEAN UNION DIRECTIVE 89/336/EEC FOR ELECTROMAGNETIC COMPATIBILITY REQUIREMENTS.

SATRON instruments

HL PRESSURE TRANSMITTER

HL pressure transmitter belongs to the H transmitter family. The series H transmitters have both analog and smart properties. HL is used for 0-40 mbar...0-150 bar ranges. The transmitter communicates in a 2-wire system. In pressure measuring applications HL transmitters are used for measuring the pressure of clean, sedimenting, crystallizing and sticking materials. The transmitter's sensor is piezoresistive. The rangeability on Smart option is 15:1. The transmitter communicates digitally using the HART® protocol.

TECHNICAL SPECIFICATIONS

Measuring range and span
See Selection Chart.
Zero and Span adjustment
Zero elevation: Calibrated span is freely selectable on the specified range depending from the desired option. This can be made by using extern control shafts (analog option), keyboard (display option) or HART®275 communicator.
Damping
- **Smart (**output code **S**, **D** and **R)**
  Time constant is continuously adjustable 1 to 60 s.
- **Analog (**output code **A** and **K)**
  Time constant is continuously adjustable
  - min.range: 0.3 to 6 s
  - max.range: 0.01 to 1 s

Temperature limits
Ambient: -30 to +80 °C
Process: -30 to +200 °C
Shipping and storage: -40 to +80 °C.

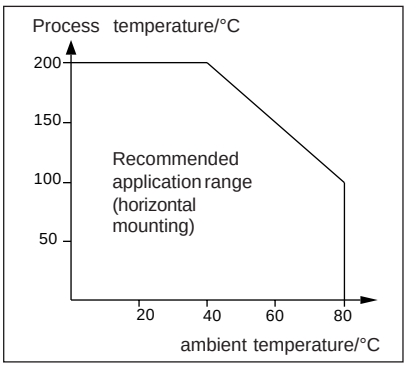

Output 2-wire (2W), 4-20 mA, user selectable for linear, square root, inverted signal or the transfer function (16 points)specified by the user
Supply voltage and permissible load
See the load capacity diagram;
- **Smart (**codes **S**, **D** and **R)**
  4-20 mA output: 11.3-40 VDC.
- **Analog (**codes **A** and **K)**
  4-20 mA output: 12-60 VDC.

Humidity limits
0-100 % RH; freezing of condensed water not allowed in reference pressure channels.

Pressure limits
Minimum and maximum process pressure: see the appended tables.

PERFORMANCE SPECIFICATIONS
Tested in accordance with IEC770: Reference conditions, specified span, no range elevation, horizontal mounting; O-ring seals, AISI316L diaphragm, silicone oil fill

Accuracy
- **Smart (**output codes **S**, **D** and **R)**
  - ±0.1 % of calibrated span (span 1:1-7.5:1 /max.range).
    On the measuring ranges 7.5:1-15:1:
    $\pm[0.01+0.012 \times (\frac{\text{max.span}}{\text{calibrated span}})]$% of calibrated span
  - Process connection **R**: ±0.25 % of calibrated span (span 1:1-7.5:1 /max.range).
    On the measuring ranges 7.5:1-15:1:
    $\pm[0.01+0.032 \times (\frac{\text{max.span}}{\text{calibrated span}})]$% of calibrated span
- **Analog (**output code **A** and **K)**
  - ±0.2 % of calibrated span (incl. nonlinearity, hysteresis and repeatability)
  - Process connection **R**: ±0.25 % of calibrated span

Long-term stability
- ±0.25 % of max. span for 6 months
- Process connection **R** (HL4 and 5): ±3 % of max. span for 6 months

Temperature effect on -30 °C to +200 °C range
Zero and span error
- ±0.5 % of max. span.
- Process connection **R** (HL6 and 7): ±1 % of max. span
- Process connection **R** (HL4 and 5): ±2 % of max. span

Mounting position effect
Deviation from horizontal position causes a zero shift that can be calibrated out.

[1] Parts in contact with process medium.

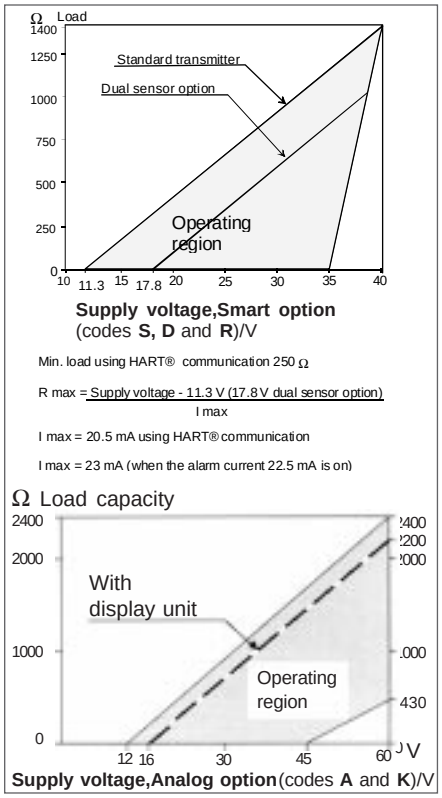

Vibration effect (IEC 68-2-6: FC):
±0.1 % of span per 2 g to 10-2000 Hz.
Power supply effect
<±0.01 % of calibrated span per volt.

EMC-test standards
CENERIC EMISSION STANDARD:
EN 50081 - 2: 1993
Normative reference:
EN 55022:1987/class A
GENERIC IMMUNITY STANDARD:
EN 50082 - 2: 1995
Normative references:
EN 61000-4-2, -4, -5, -8, -11
ENV 50140, ENV 50204, ENV 50141

Insulation test voltage
500 V rms 50 Hz.

Pressure limits

Pressure capacity

Transmitter type	Max. overload pressure (bar)	Pressure class
HL4	3	PN40
HL5	15	PN40
HL6	75	PN100
HL7	250	PN250

Minimum process pressure:

$T_{proc.}$ °C	Min.pressure for different fill fluids (mbar, abs.) DC200 100 cSt	Inert oil
20	50	80
40	80	100
80	100	280
120	150	530
160	250	900
200	400	-

Satron Instruments Inc., P.O.Box 240, FIN-33201 Tampere, Finland
Tel. +358 3 387 1800, Telefax +358 3 387 1899

CONSTRUCTION AND CALIBRATION

Materials

Diaphragm [1)]: AISI316L, Hast. C276 or Tantalum.
Other sensing element materials: AISI316L, SIS 2382, AISI316.
Fill fluid Silicone oil or inert oil.

Housing with PLUG connector, A and H

Housing: AISI316 or Aluminium alloy (Nickel-Chrome coating)
Seals: Viton and NBR
TEST jacks: MS358Sn/PVDF, protected with silicone rubber shield.
PLUG connector: PA6-GF30 jacket, Silicone rubber seal, AISI316 retaining screw.

Housing with junction box/terminal strip, B and M

Housing: AISI316 or Aluminium alloy (Nickel-Chrome coating); Seals: Nitrile and Viton; Nameplates: Polyester

Connection cable between sensing element and housing

(codes **L** and **K**):
PTFE hose with AISI316 braiding.

Calibration

For customer-specified range with minimum damping. (If range is not specified, transmitter is calibrated for maximum range.)
Enclosure class: IP66.

Process connections

See Selection Table and dimensional drawings.
With process coupling **R** see Technical Specifications: Couplings for Transmitters G150 or HG pressure transmitter BPLH700 .

Electrical connections

Housing with PLUG connector, **A** and **H:** PLUG connector, connector type DIN 43650 model AF; Pg9 gland for cable; wire gross-section 0.5 to 1.5 mm^2.

Housing with junction box/terminal strip, **B** and **M:**
Pg13.5, 1/2-NPT inlet; screw terminals for
0.5 to 2.5 mm^2 wires, code **M**
0.4 to 0.8 mm^2 wires, code **B**.

Weight

MOUNTING TYPE		Weight / kg			
		EXTENSION CODE			
		0	2	4	6
Flange	DN50	4.4	5.0	5.2	5.4
	DN80	6.7	7.9	8.0	8.2
S (Sandvik)		-	4.1	5.3	6.4
T (Tri-Clamp)		1.2	-	-	-
R (G1A)		1.6	-	-	-
P (PMC 1")		1.2	-	-	-

Type M: add 0.5 kg to the specified weights.

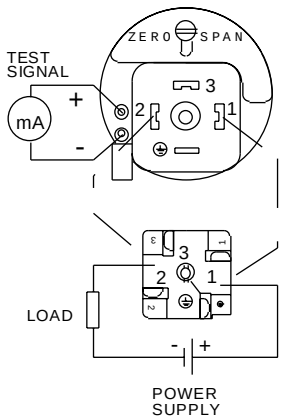

Wiring
Analog option, housing **H** (AISI316)

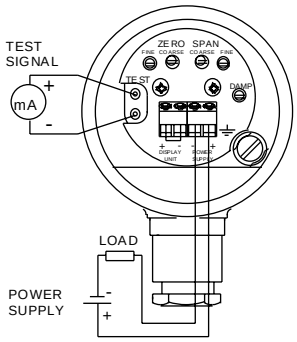

Wiring
Analog option, housing **M** (AISI316)

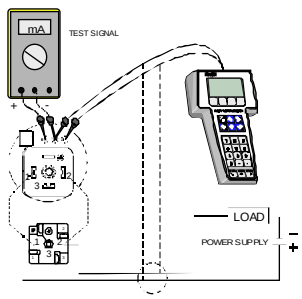

Wiring
Smart option, housing **H** (AISI316)

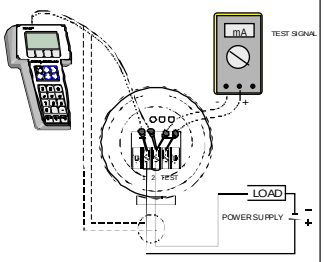

Wiring
Smart option, housing **M** (AISI316)

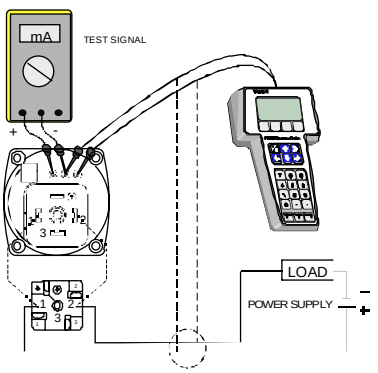

Wiring
Smart option, housing **A** (Aluminium alloy)

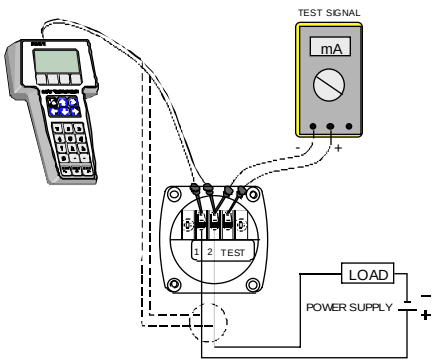

Wiring
Smart option, housing **B** (Aluminium alloy)

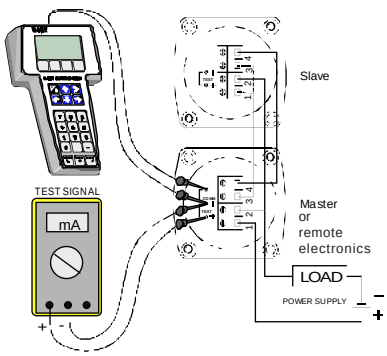

Wiring
Dual Sensor Option

HL PRESSURE TRANSMITTER

Dimensional drawings (dimensions in mm)

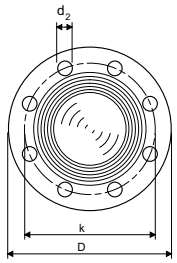

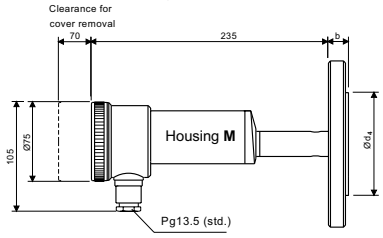

Process connection, flanged

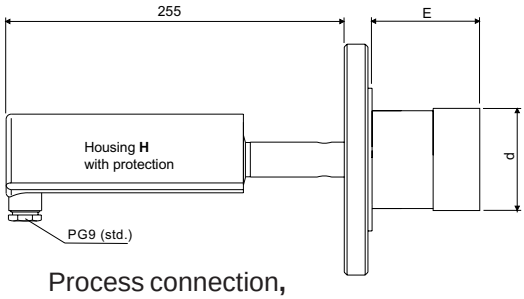

Process connection, flanged with extension

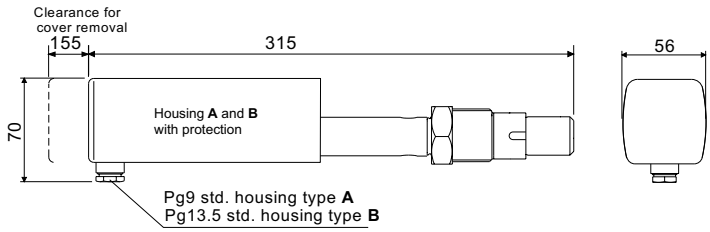

Process connection **R**,
- G1A (metal/metal taper sealing)

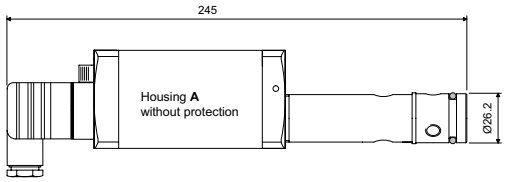

Process connection **P**
- PMC 1"

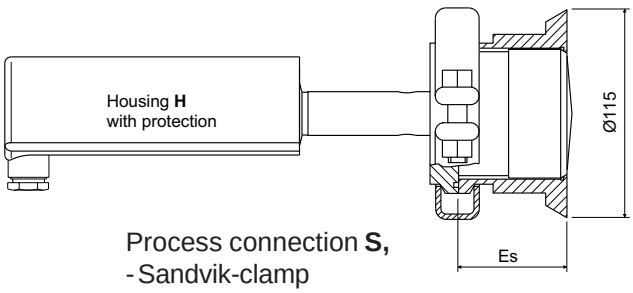

Process connection **S**,
- Sandvik-clamp

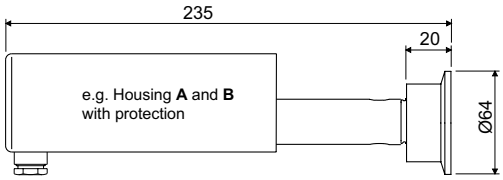

Process connection **T**,
- Tri-clamp DN51 (2")

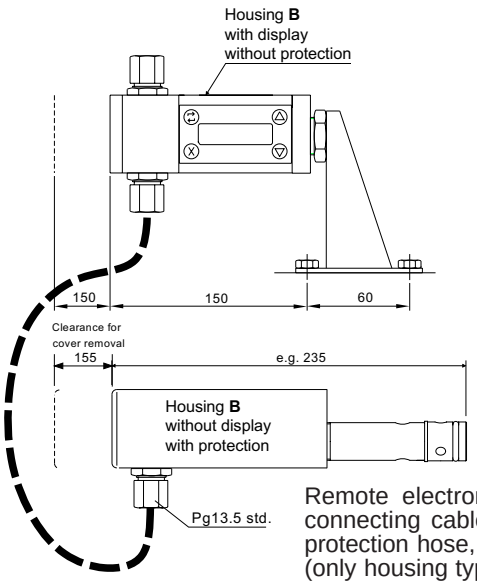

Remote electronics, connecting cable without protection hose, code **R** (only housing type B)

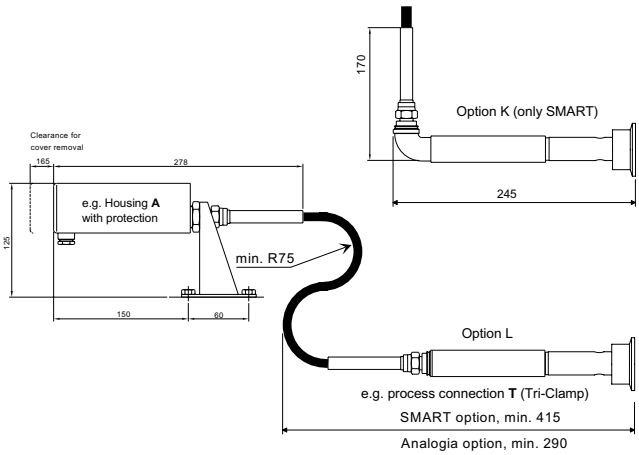

Remote electronics, connecting cable with protection hose, codes **L** and **K**

Code	E +0.4 -0.4	Es +0.3 -0.2
0	0	-
2	51	53
4	102	104
6	152	155

FLANGE SIZE	Flange dimens.			Holes			Exten.
	b	D	Ød4	Qty	d2	k	Ød ±0.3
ISO DN50 PN40	20	165	102	4	18	125	51
ISO DN80 PN40	24	200	138	8	18	160	73
ANSI 2" 150 lbs	23	152	92	4	20	120.6	51
ANSI 2" 300 lbs	25	165	92	8	20	127	51
ANSI 3" 150 lbs	26	191	127	4	20	152.4	73
ANSI 3" 300 lbs	31	210	127	8	23	168.3	73

HL PRESSURE TRANSMITTER

Selection Chart

Adjustability (±)

	Span **Smart**, min.	Span **Analog**, min.	Span max.	Measuring range
HL4	40 mbar (4kPa)	80 mbar (8 kPa)	600 mbar (60 kPa)	-600...600 mbar (-60...+60 kPa)
HL5	265 mbar (26.5 kPa)	600 mbar (60 kPa)	4000 mbar (400 kPa)	-950...4000 mbar (-95...+400 kPa)
HL6	1.45 bar (0.145 MPa	2.9 bar (0.29 MPa)	22 bar (2.2 MPa)	-1...22 bar (-0.1...+2.2 MPa)
HL6A	1.45 bar (0.145 MPa)	2.9 bar (0.29 MPa)	22 bar (2.2 MPa)	0...22 bar (0...+2.2 MPa), abs.
HL7	10 bar (1 MPa)	20 bar (2 MPa)	150 bar (15 MPa)	0...150 bar (0...+15 MPa), abs.

Output **A** 4-20 mA DC **K** 4-20 mA DC (inverse) **S** 4-20 mA DC/Digital HART Protocol
D 4-20 mA DC/with dual sensor/Digital HART Protocol (only housing type **B**)
R 4-20 mA DC/remote electronics,connect.cable without protection hose/Digital HART Protocol(only hous. **B**)

Process connections
E DN50 PN40 ISO 2084-1974 **A** ANSI 3" 150 lbs ANSI B16-5 **R** G1A PN250 metal/metal taper sealing
F DN80 PN40 ISO 2084-1974 **C** ANSI 3" 300 lbs ANSI B16-5 **P** PMC 1"
Y ANSI 2" 150 lbs ANSI B16-5 **S** Sandvik DN70 PN64
Z ANSI 2" 300 lbs ANSI B16-5 **T** Tri-clamp DN51 PN30 ISO 2852

Extension length (mm)	(Flanged conn.)	(Sandvik-conn.)	
0	0	**-**	(not proc. conn. S)
2	51	53	(not proc. conn. T, R and P)
4	102	104	(not proc. conn. T, R and P)
6	152	155	(not proc. conn. T, R and P)

Wetted parts

Diaphragm code	material	**Extension or other wetted parts** code	material
2	AISI316L	**2**	AISI316L
3	Hast.C 276	**3**	Hast.C 276
5	Tantalum		

Fill fluid **S** Silicone oil **G** Inert oil

Housing type
H Housing (AISI316) with plug connector, DIN 43650, no display, inlet PG9
M Housing (AISI316), with junction box/terminal strip, no display, inlet PG13.5
A Housing (Alum.alloy) with plug connector,DIN 43650,with display (only smart),inlet PG9
B Housing (Alum.alloy) with junction box/terminal strip, with display(only smart),inlet PG13.5

Explosion proof **0** No explosion proof classification

□□□□□□□□ □□ / □ / □□□ / □□□

Process coupling (for types S,T, R and P) **Material**
0 No coupling **E** Hygienic coupling (R) **2** AISI316L
G Standard coupling **3** Hast.C276
P PASVE mounting valve, specify separately in the order (R)
Specify special couplings separately in the order

Special size of electrical inlet
N 1/2 NPT **M** M20 x 1.5 (only housing codes **B** and **M**)
T Pg 16 (housing codes **B** and **M**)
G Pg13.5 (housing codes **A** and **H**)

Special features
Special electronics (specify only if housing connected with hose to sensing element)
- connecting cable with protection hose (output code **A**, **K**, **S** and **D**)
L Hose protected with PTFE/AISI316 braiding, straight
K Hose protected with PTFE/AISI316 braiding, angle of 90º, only Smart
- connecting cable without protection hose (output code **R**)
0 Connecting cable will not be delivered with the transmitter
P Connecting cable will be delivered with the transmitter

Length of cable between sensing element and housing
(specify only if housing connected with cable to sensing element)
2 2 m cable **3** 3 m cable etc. (max. 20 m)

Mounting parts for remote electronics
0 No mounting parts **1** Mounting parts

Documentation

Calibration Certificate **AE** English

Installation and Operating Instructions **IE** English **IF** Finnish

Material Certificates
0 No material certificate
MC1 Raw materials certificate without appendixes, in accordance with SFS-EN 10204-2.1 (DIN 50049-2.1) standard
MC2 Raw materials certificate for wetted parts with appendixes, in accordance with SFS-EN 10204-2.2 (DIN 50049-2.2) standard
MC3 Raw materials certificate for wetted parts with appendixes, in accordance with SFS-EN 10204-3.1B (DIN 50049-3.1B) standard

CE
MEETS THE COUNCIL OF THE EUROPEAN UNION DIRECTIVE 89/336/EEC FOR ELECTROMAGNETIC COMPATIBILITY REQUIREMENTS.

SATRON instruments

HDL DIFFERENTIAL PRESSURE TRANSMITTER

BLH830
August 2, 1999

HDL differential pressure transmitter belongs to H-transmitter family. The series H transmitters have both analog and smart properties. HDL is used for 10 mbar...22 bar ranges. The transmitter communicates in a 2-wire system. In pressure measuring applications HDL transmitters are used for liquid level, pipeline pressure and density measurements. HDL transmitter is equipped with an SOS (Silicon On Sapphire) sensing element. The rangeability on Smart option is 15:1. The transmitter communicates digitally using the HART® protocol.

TECHNICAL SPECIFICATIONS

Measuring range and span
See Selection Chart.
Zero and Span adjustment
Zero elevation: Calibrated span is freely selectable on the specified range depending from the desired option. This can be made by using extern control shafts (analog option), keyboard (display option) or HART®275 communicator.
Damping
- Smart (code **S**, **D** and **R)**
Time constant is continuously adjustable 1 to 60 s.
- Analog (code **A** and **K)**
Time constant is continuously adjustable
- min.range: 0.3 to 6 s
- max.range: 0.01 to 1 s

Temperature limits
Process temperature:
range **3**: +10 to +80 °C
range **4**: -10 to +100 °C
ranges **5** and **6**: -30 to +120 °C
Ambient temperature: -30 to +80 °C
Shipping and storage: -30 to +80 °C.

Pressure limits
Withstands 40 bar static pressure and unequal pressure load without damage to the transmitter. Pressure class: see Process Connections. See the following table for minimum pressure limits.

Minimum process pressure:

T_{proc} °C	Min. pressure for different fill fluids (mbar, abs.)	
	DC200 10 cSt	Inert oil
20	50	80
60	120	185
80	160	280
120	210	530

Volume of negative-side process chamber: 20 cm³.

Process chamber's volumetric displacement for maximum span:
0.20 cm³ for range **3**, 0.40 cm³ for range **4**, 0.47 cm³ for range **5** and 0.70 cm³ for range **6**.

Output 2-wire (2W), 4-20 mA, user selectable for linear, square root, inverted signal or the transfer function (16 points)specified by the user

Supply voltage and permissible load
See the load capacity diagram;
- Smart (code **S**, **D** and **R)**
4-20 mA output: 11.3-40 VDC.
- Analog (code **A** and **K)**
4-20 mA output: 12-60 VDC.
Humidity limits
0-100 % RH; freezing of condensed water not allowed in reference pressure channels.

PERFORMANCE SPECIFICATIONS
Tested in accordance with IEC770: Reference conditions, specified span, no range elevation, horizontal mounting; CoNi diaphragm, silicone oil fill.

Accuracy
- Smart (code **S**, **D** and **R)**
±0.25 % of calibrated span (span 1:1-7.5:1 /max.range).
On the measuring ranges 7.5:1-15:1:
$\pm[0.01+0.032 \times (\frac{\text{max.span}}{\text{calibrated span}})]$% of calibrated span

- Analog (code **A** and **K)**
±0.25 % of calibrated span (incl. nonlinearity, hysteresis and repeatability)

Long-term stability
±0.25 %/max. span for 6 months

Temperature effect on compensated temperature range
Ambient: Zero and span shift: ±1.0 % of max. span.
Process: Zero error: ±1.0 % of max.span (ranges 4,5 and 6), ±1 mbar per 10 K (range 3)

Static pressure effect on Zero
- ±1.0 % of max.span per 40 bar for range 3
- ±0.5 % of max.span per 40 bar for ranges 4,5 and 6.

Mounting position effect
Deviation from horizontal position causes a zero shift that can be calibrated out.

Power supply effect
< ±0.01 % of calibrated span per volt.

[1] Parts in contact with process medium.

EMC-test standards
GENERIC EMISSION STANDARD:
EN 50081 - 2: 1993
Normative reference:
EN 55022:1987/class A
GENERIC IMMUNITY STANDARD:
EN 50082 - 2: 1995
Normative references:
EN 61000-4-2, -4, -5, -8, -11
ENV 50140, ENV 50204, ENV 50141
Insulation test voltage
500 V rms 50 Hz

CONSTRUCTION AND CALIBRATION
Materials
Diaphragms [1]: CoNi alloy, AISI316L or Hast. C276.
Flanges [1] and vent valves [1]: AISI316 or Hast. C276.
O-ring on sensing element: PTFE.
Other sensing element materials: AISI316, SIS 2343, SIS 2324.
Mounting bolts and nuts for sensor flanges: AISI316

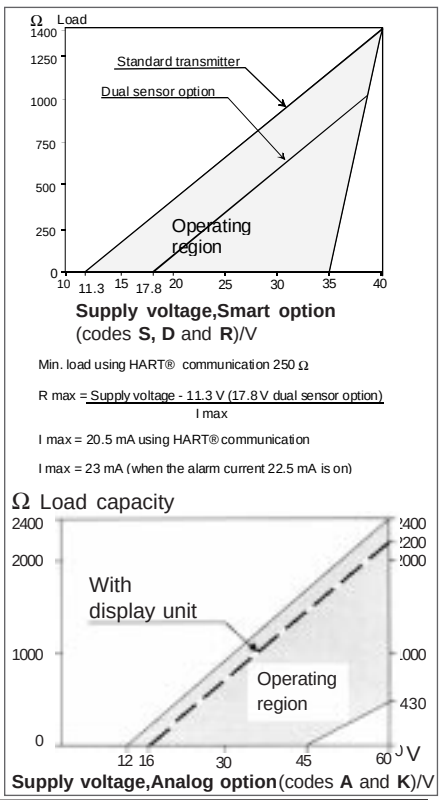

SATRON instruments
Satron Instruments Inc., P.O.Box 240, FIN-33201 Tampere, Finland
Tel. +358 3 387 1800, Telefax +358 3 387 1899

HDL DIFFERENTIAL PRESSURE TRANSMITTER

Fill fluid
Silicone oil (DC200, 10 cSt) or inert oil or food industry oil (Neobee M-20).

Housing with PLUG connector, A and **H**
Housing: AISI316 or Aluminium alloy (Nickel-Chrome coating)
Seals: Viton and NBR
TEST jacks: MS358Sn/PVDF, protected with silicone rubber shield.
PLUG connector: PA6-GF30 jacket, Silicone rubber seal, AISI316 retaining screw.

Housing with junction box/terminal strip, B and **M**
Housing: AISI316 or Aluminium alloy (Nickel-Chrome coating); Seals: Nitrile and Viton; Nameplates: Polyester

Connection hose between sensing element and housing
(codes **L** and **K**):
PTFE hose with AISI316 braiding.

Calibration
For customer-specified range with minimum damping. (If range is not specified, transmitter is calibrated for maximum range.)

Enclosure class: IP66.

Process connections
See Selection Table.

Electrical connections
Housing with PLUG connector, **A** and **H:** PLUG connector, connector type DIN 43650 model AF; Pg9 gland for cable; wire gross-section 0.5 to 1.5 mm^2.

Housing with junction box/terminal strip**, B** and **M:**
Pg13.5, 1/2-NPT inlet; screw terminals for 0.5 to 2.5 mm^2 wires, code **M**
0.4 to 0.8 mm^2 wires, code **B**.

Weight (kg): See the table; add 0.5 kg for transmitter with screwed cap housing

Type	Extension code			
	0	**2**	**4**	**6**
HDLxxxF*	10.7	11.1	11.5	11.9
HDLxxxS		8.4	8.9	9.3

* process connection code

Dimensions (in mm)

FLANGE SIZE	Flange dimensions			Holes		
	b	D	Ød$_4$	Qty	d$_2$	k
ISO DN80 PN40	24	200	138	8	18	160
ANSI 3" 150 lbs	26	191	127	4	20	152.4
ANSI 3" 300 lbs	31	210	127	8	23	168.3

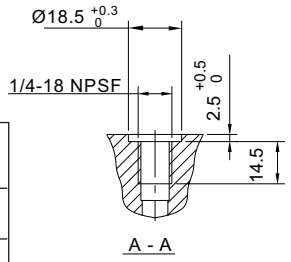

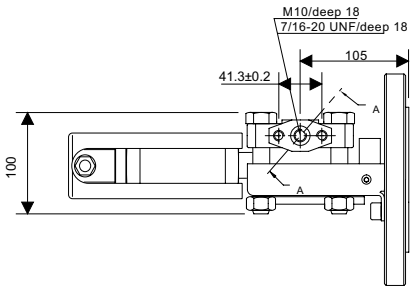

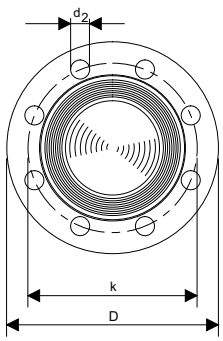

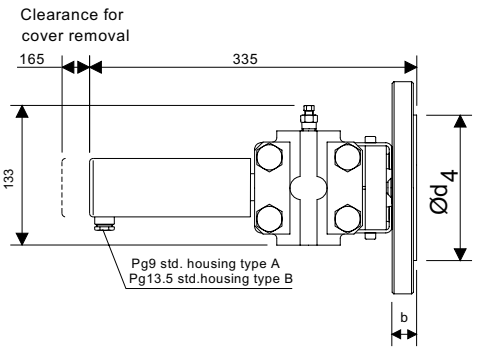

Type F (A and **C)**

Housing types **A** and **B,** Aluminium alloy

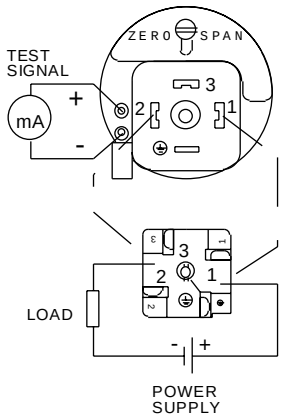

Wiring
Analog option, housing **H** (AISI316)

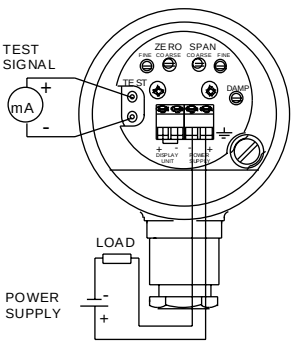

Wiring
Analog option, housing **M** (AISI316)

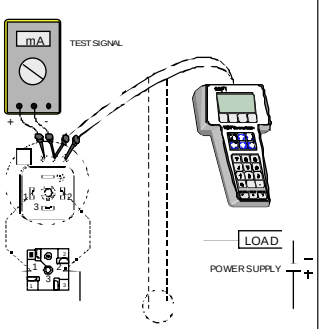

Wiring
Smart option, housing **H** (AISI316)

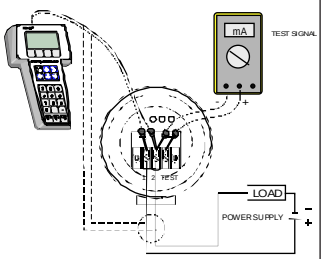

Wiring
Smart option, housing **M** (AISI316)

HDL DIFFERENTIAL PRESSURE TRANSMITTER

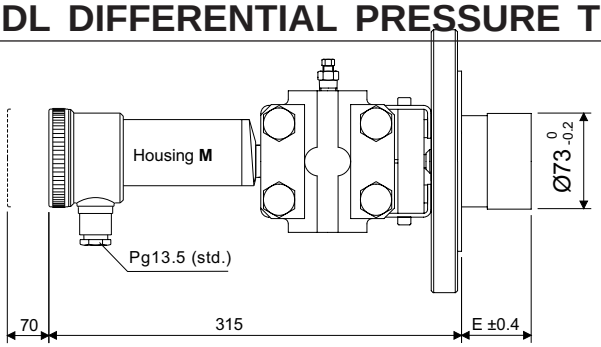

Housing type **M,** AISI316

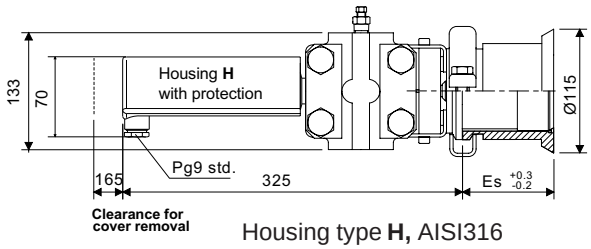

Housing type **H,** AISI316

Type F (A and C), with extension

	Extension code			
	0	2	4	6
Dim. E	0	51	102	152

Type S

	Extension code		
	2	4	6
Dim. Es	53	104	155

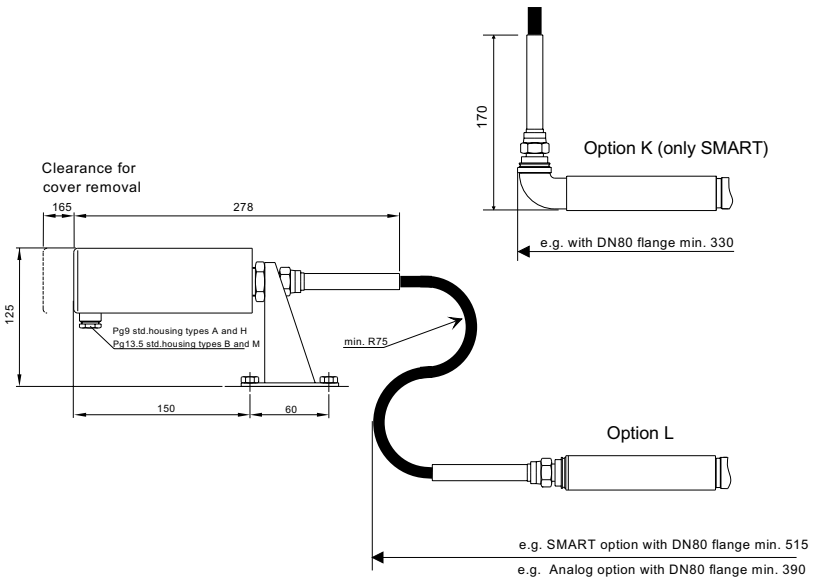

Remote electronics,
connecting cable with protection hose,
codes **L** and **K**

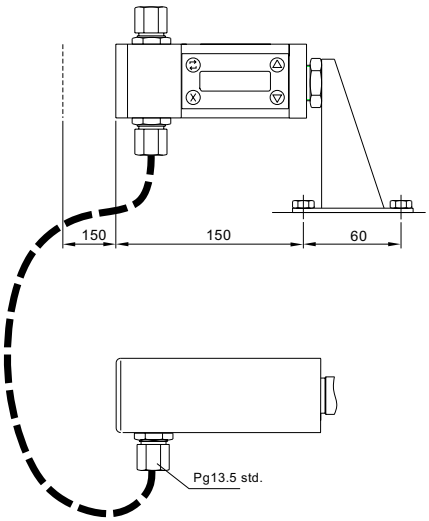

Remote electronics, connecting cable without protection hose, code **R** (only housing type **B**)

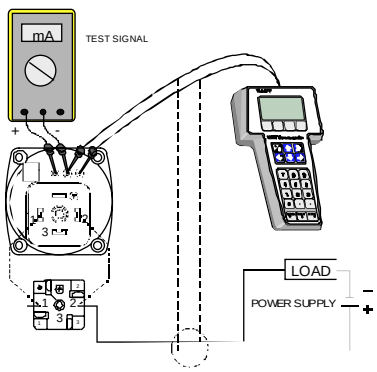

Wiring
Smart option, housing **A**
(Aluminium alloy)

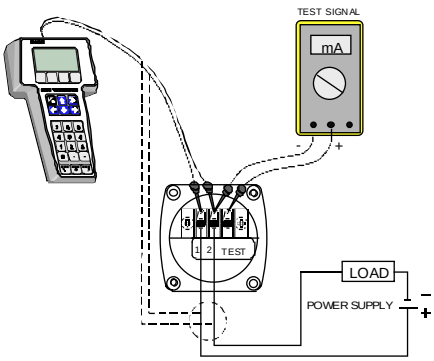

Wiring
Smart option, housing **B**
(Aluminium alloy)

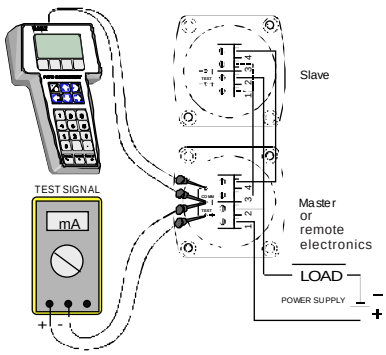

Wiring
Dual Sensor Option

HDL DIFFERENTIAL PRESSURE TRANSMITTER

Selection Chart

HDL **Differential Pressure Transmitter**
HAL **Absolute Pressure Transmitter** **(ranges 4 to 6, measuring range 0...xx, abs.)**

Adjustability (±)

	Span **Smart**, min.	Span **Analog**, min.	Span max.	Measuring range
3	10 mbar (1.0 kPa)	20 mbar (2.0 kPa)	63 mbar (6.3 kPa)	-63...+63 mbar (-6.3...+6.3 kPa)
4	27 mbar (2.7 kPa)	54 mbar (5.4 kPa)	410 mbar (41 kPa)	-410...+410 mbar (-41...+41 kPa)
5	200 mbar (20 kPa)	400 mbar (40 kPa)	3000 mbar (300 kPa)	-3000...+3000 mbar (-300...+300 kPa)
6	1.45 bar (145 kPa)	2.9 bar (290 kPa)	22 bar (2.2 Mpa)	-22...+22 bar (-2.2...+2.2 Mpa)

Output **A** 4-20 mA DC **K** 4-20 mA DC (inverse) **S** 4-20 mA DC/Digital HART Protocol
D 4-20 mA DC/with dual sensor/Digital HART Protocol (only housing type **B**)
R 4-20 mA DC/remote electronics,connect.cable without protection hose/Digital HART Protocol(only hous. **B**)

Process connections **F** DN80-PN40 ISO 2084-1974 **C** ANSI 3" 300 lbs ANSI B16-5
A ANSI 3" 150 lbs ANSI B16-5 **S** Sandvik DN70 PN40

Extension length/mm	Process connections A, C and F	Process connection S
0	0	-
2	51	53
4	102	104
6	152	155

Wetted materials

(-)-flange Code	Material	**(+)diaphragm** Code	Material	**(-)-diaphragm** Code	Material	**Extension** Code	Material	**(-)diaphragm coating** Code*	Material
2	AISI316L	**2**	AISI316L	**2**	AISI316L (std, range 6)	**2**	AISI316L	**9**	gold/Rhodium
3	Hast.C 276	**3**	Hast.C 276	**3**	Hast.C 276	**3**	Hast.C 276		*(Do not enter code if diaphragm not coated)
		5	Tantalum	**7**	CoNi alloy (std, range codes 3 to 5)				

Fill fluid **S** Silicone oil **A** Oil for food Industry (Neobee M-20) **G** Inert oil

(-)-side process connection **D** M10, PN100, ranges 3 to 6, DIN 19213 Teil 1.
U 7/16-20 UNF, PN100, ranges 3, 4, and 5 only.
F Screwed flange adapters, PN100, DIN 19213 Teil 1.
V Connection through hydraulic seal (not recommended for ranges 3 and 4).

Housing type **H** Housing (AISI316) with plug connector, DIN 43650, no display, inlet PG9
M Housing (AISI316), with junction box/terminal strip, no display, inlet PG13.5
A Housing (Alum.alloy) with plug connector,DIN 43650,with display (only smart),inlet PG9
B Housing (Alum.alloy) with junction box/terminal strip, with display(only smart),inlet PG13.5

Explosion proof **0** No explosion proof classification

□□□□□□□□□□ / □□ / □□□ / □□□

Process thread on flange adapter
(only specify for (-)-side process conn. F)

Thread type Code	Type	**Thread size** Code	Size
R	straight R thread	**2**	1/4
N	NPS thread	**3**	3/8
P	taper R thread	**4**	1/2
T	NPT thread		

Special size of electrical inlet
N 1/2 NPT **M** M20 x 1.5 (only housing codes **B** and **M**)
T Pg 16 (housing codes **B** and **M**)
G Pg13.5 (housing codes **A** and **H**)

Special features

Special electronics (specify only if housing connected with hose to sensing element)
- connecting cable with protection hose (output code **A**, **K**, **S** and **D**)
L Hose protected with PTFE/AISI316 braiding, straight
K Hose protected with PTFE/AISI316 braiding, angle of 90º, only Smart
- connecting cable without protection hose (output code **R**)
0 Connecting cable will not be delivered with the transmitter
P Connecting cable will be delivered with the transmitter

Length of cable between sensing element and housing
(specify only if housing connected with cable to sensing element)
2 2 m cable **3** 3 m cable etc. (max. 20 m)

Mounting parts for remote electronics
0 No mounting parts **1** Mounting parts

Documentation

Calibration Certificate **AE** English

Installation and Operating Instructions **IE** English **IF** Finnish

Material Certificates
0 No material certificate
MC1 Raw materials certificate without appendixes, in accordance with SFS-EN 10204-2.1 (DIN 50049-2.1) standard
MC2 Raw materials certificate for wetted parts with appendixes, in accordance with SFS-EN 10204-2.2 (DIN 50049-2.2) standard
MC3 Raw materials certificate for wetted parts with appendixes, in accordance with SFS-EN 10204-3.1B (DIN 50049-3.1B) standard

CE
MEETS THE COUNCIL OF THE EUROPEAN UNION DIRECTIVE 89/336/EEC FOR ELECTROMAGNETIC COMPATIBILITY REQUIREMENTS.

SATRON instruments

Installation

We manufacture the following mounting accessories for pressure and differential pressure transmitters:

PASVE mounting & service valve ..... Spec. G340
Mounting couplings for transmitters ..... Spec. G150

Other mounting accessories:

PASVE pH mounting & service valve
for pH electrodes ..... Spec. G345
PASVE SC/SP/ST Sampling Valve .....Spec. G347

INSTALLATION OF PRESSURE AND DIFFERENTIAL PRESSURE TRANSMITTERS

The transmitters are isolated from the process with impulse piping and valves, or with a diaphragm seal unit. This isolation protects the transmitter against harmful pressure, temperature, corrosion and vibration effects. It also permits the transmitter to be mounted at the most convenient location from the servicing and maintenance viewpoint.

Pressure transmitters can also be mounted directly on the process pipe (fig. 1) or vessel. In direct mounting you should make sure that the measuring device is suitable for the prevailing conditions. It is advisable to avoid installing transmitters at locations where they would be subjected to heavy vibration and very high temperatures. A wisely chosen mounting environment and suitable mounting accessories will ensure accurate measurement and easy maintenance at the measurement point.

CONNECTING THE TRANSMITTER TO THE IMPULSE PIPING

You connect the transmitter to the impulse piping with mounting valves (Fig. 2), or with a mounting bracket and separate valves.

Figure 1

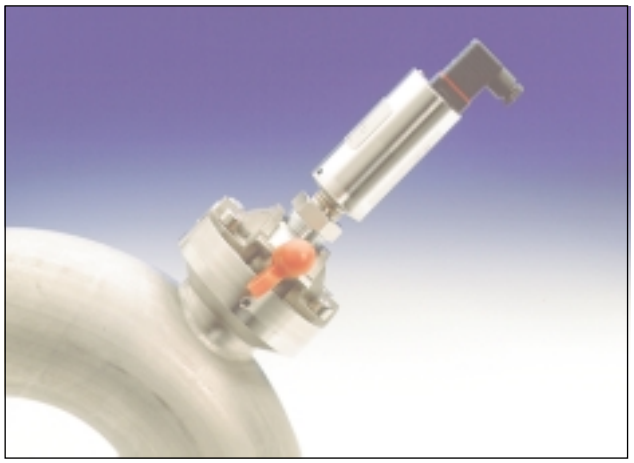

Figure 2

Satron Instruments Inc., P.O.Box 240, FIN-33201 Tampere, Finland
Tel. +358 3 387 1800, Telefax +358 3 387 1899

PASVE is a ball-type mounting & service valve for HG and LEV/ PRESS-EL PG/PGS type level and pressure transmitters.
PASVE makes it simple to disconnect the transmitter from the process for maintenance and cleaning, without stopping the process or draining the tank.

PASVE is available in a manually operated type or equipped with a pneumatic actuator.

TECHNICAL SPECIFICATIONS

Transmitter connection
G1 female, seat accepts HG and LEV/ PRESS-EL PG/PGS transmitters.

Max. operating pressure/temperature
Pressure 40 bar, temperature 250 °C, (see the appended table).
Min. operating temp. -50 °C.
PVDF: See the appended table.

Materials
Wetted parts: AISI316L, for **F** type also Titanium and PVDF. Seals PTFE or PTFE with carbon and graphite filling.

Weight
PASVE GC 4.3 kg, PASVE GP 4.2 kg, PASVE GF 8.4 kg, Actuator 5.5 kg

Pressure/Temperature curve

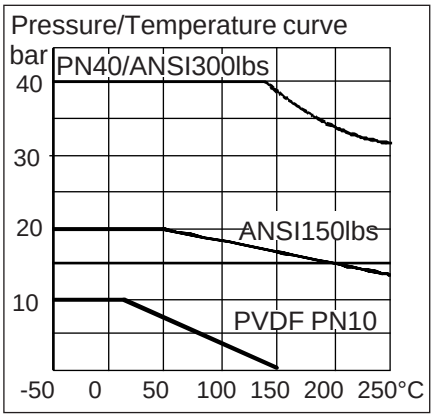

Selection table

PASVE ☐ ☐☐ ☐ ☐ ☐☐ ☐ ☐ ☐ ☐

Body
G Std. (with 3 seals)
N Flushing (with 2 seals)

Mounting
C On container
P On pipe
F On flange:

Flange dimensions

DN80	**D**
ANSI 3"/150	**A**
ANSI 3"/300	**B**
JIS 10K 80	**E**
JIS 40K 80	**F**
*)Other flanges	**S**

Parts in contact with process medium

2	AISI316L
6	Titanium
P1	PVDF PN10

***)** Contact Satron Instruments

Seals
0 PTFE + 20C + 5Gr (as standard)
1 PTFE 100%

Pt100 Temperature sensor (Only with body code **N**)
0 No sensor
X With sensor (Measuring range: -50...+200 °C)

Actuator
MD No actuator (manually operated)
AD_ Double-action actuator
AS_ Spring-return actuator

Solenoid valve type (for codes **AD** and **AS** only)
1 _ 230 V AC 50 Hz (std.)
2 _ 24 V DC
3 _ 115 V AC 60 Hz

Explosion proof for solenoid valve
0 No
1 Ex m II T4

Position switches
0 None
X Equipped with position switches
E Position switch NAMUR, DIN 19234

Options
Z1 Oxygen wash
Z2 Process side flushing

Documentation
IE English
IF Finnish

Material certificates
0 No material certificate
MC1 SFS-EN 10204-2.1 (DIN50049-2.1)
MC2 SFS-EN 10204-2.2 (DIN50049-2.2)
MC3 SFS-EN 10204-3.1B (DIN50049-3.1B)

Specification example: **PASVE G FD2 0 X AD1 X**

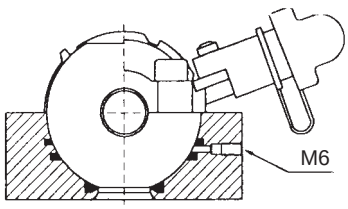

Body **G**

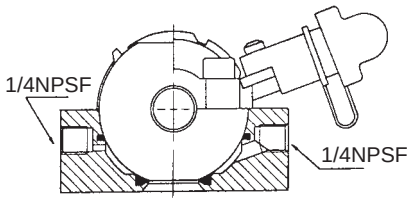

Body **N**

Satron Instruments Inc., P.O.Box 240, FIN-33201 Tampere, Finland
Tel. +358 3 387 1800, Telefax +358 3 387 1899

Dimensions (mm)

Manually operated

PASVE GF-(a)
NF-(a)
Flange type

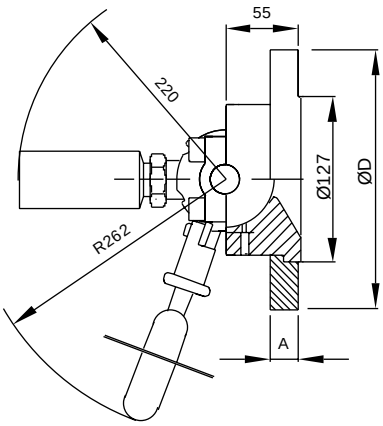

PASVE GC
NC
Welded on container

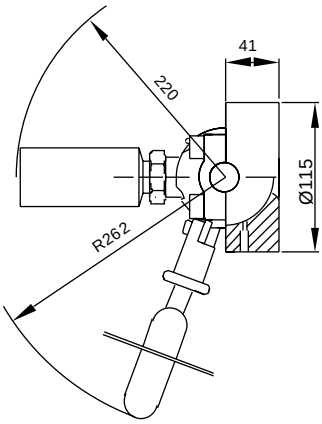

PASVE GP
NP
Welded on pipe

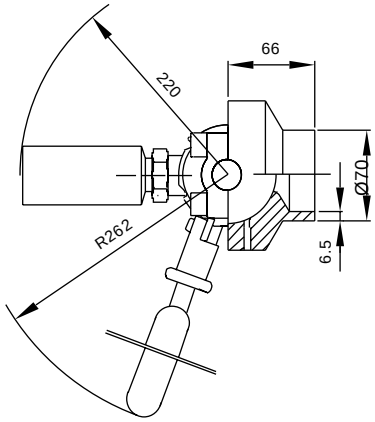

GF-(a)

a	FLANGE	ØD	Ød	A
A	ANSI 3" 150 lb	191	152.4	22
B	ANSI 3" 300 lb	210	168.3	27
D	DN80 PN40	200	160	22
E	JIS 10K 80	185	150	20
F	JIS 40K 80	210	170	30

With pneumatic actuator

PASVE GF-(a)
NF-(a)

PASVE GC
NC

PASVE GP
NP

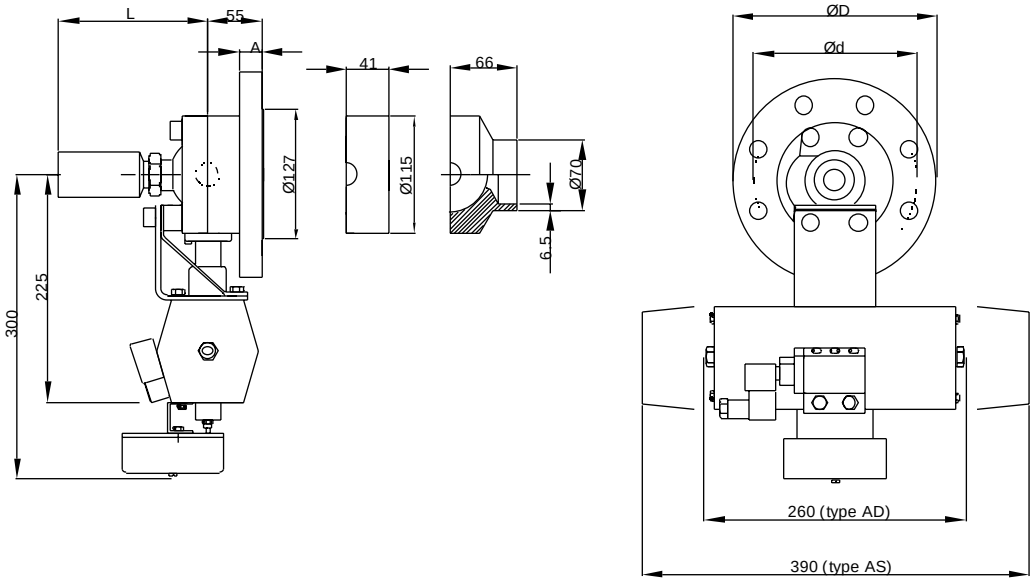

OPERATING POSITIONS

Measuring position

Replacement and zero setting

Cleaning and checking, only manual model

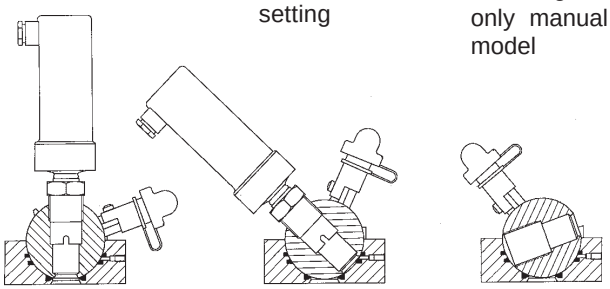

SPARES

V534159 Service set
Incl. seals and bearing strips
Seal material: PTFE with carbon and graphite filling

V551344 Service set
Incl. seals and bearing strips
Seal material: pure PTFE

PATENTS

FI 71838	US 4,628,732	FR 0197077
DE P3566577.7	GB 0197077	JP 2112935
KR 69579	NL 0197077	

PASVE pH Mounting & Service Valve

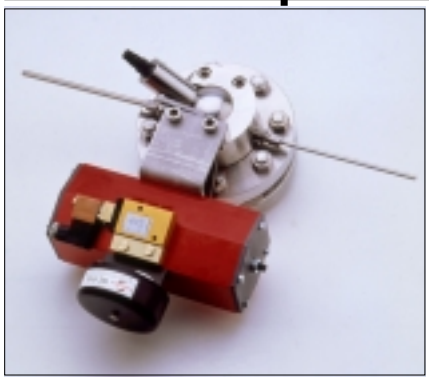

PASVE pH is a mounting/service valve for pH sensors. It can be used with practically all pH sensors in this size category.

PASVE pH allows the cleaning and calibration of pH sensors without stopping the process. When required, this can be done automatically. To protect the sensor in abrasive processes, it can be turned to the measuring position only for the duration of the actual measurement.

PASVE pH is available in a manually operated type or equipped with a pneumatic or electric actuator.

TECHNICAL SPECIFICATIONS

Applicable pH sensors
Refer to the Selection Table.

Max. operating pressure/ temperature
40 bar, 250 °C, (see the appended table). Min. operating temp. -50°C. Sensor-specific limitations should also be taken into account in applications.

Pressure/Temperature curve

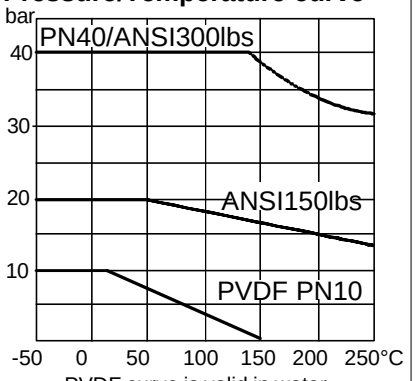

PVDF curve is valid in water and other clean liquids

Materials
Wetted parts: AISI316L, for type **F** also Titanium, Hastelloy276 and PVDF and for types **T** and **D** Titanium.
Seals: PTFE, or PTFE with carbon and graphite filling.

Weight
PASVE pHC 4.7 kg, PASVE pHP 4.8 kg, PASVE pHF 8.9 kg,
Actuator 5.5 kg

Selection Table

PASVE pH ☐☐☐☐☐☐☐☐☐☐☐

Mounting type
- **C** On container, welded
- **B** On container, body 15º, welded
- **P** On pipe, welded
- **F** On flange
- **T** Flow-through, threaded connection (dual threaded)
- **D** Flow-through, flange connection (dual flanges)

Process connection type, specified for mounting type F

Flanges Code	Flanges Type	Wetted parts Code	Wetted parts Material
D	DN80 PN40	**2**	AISI316L
C	DN100 PN40	**6**	Titanium
A	ANSI 3"/150 lps	**3**	Hastelloy 276
B	ANSI 3"/300 lps	**P1**	PVDF PN10
G	ANSI 4"/300 lps	(P1 only for flange codes D,A,E)	
E	JIS 10K 80		
F	JIS 40K 80		

Process connection type, specified for mounting type T

Threads Code	Threads Type	Wetted parts Code	Wetted parts Material
2	1" NPT	**2**	AISI316L
4	1.5" NPT	**6**	Titanium
5	2" NPT		

Process connection type, specified for mounting type D

Flanges Code	Flanges Type	Flanges Code	Flanges Type	Wetted parts Code	Wetted parts Material
G	DN25 PN40	**R**	JIS 10K 40	**2**	AISI316L
H	ANSI 1"/150 lps	**S**	JIS 10K 40	**6**	Titanium
J	ANSI 1"/300 lps	**T**	DN50 PN40		
K	JIS 10K 25	**U**	ANSI 2"/150 lps		
L	JIS 40K 25	**V**	ANSI 2"/300 lps		
M	DN40 PN40	**X**	JIS 10K 50		
N	ANSI 1.5"/150 lps	**Y**	JIS 40K 50		
P	ANSI 1.5"/300 lps				

Seals
- **0** PTFE + 20C + 5Gr (as standard)
- **1** PTFE 100%

Sensor connection

Std. sensor connection
PG13.5/length 120 mm
- **S** R < 30 mm
- **M** R < 20 mm
- **L** R < 10 mm

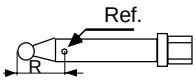

Special sensor connection types

Code	Sensor	Code	Sensor
R2	Rosemount 385+	**E1**	CPF81
R4	Rosemount 396TUpH	**E2**	CPF81 flat glass
R6	Rosemount 396P	**F1**	Foxboro 871A
T3	TBI TB564/BJ ST864	**F2**	Foxboro 871pH
T4	TBI TB561		
T5	in-line TB564 (manual only)		
T6	in-line TB561(manual only)		
O2	Orbisphere (type 31110)		

Pt100 Temperature sensor
- **0** No sensor
- **X** With sensor (Measuring range: -50...+200 °C)

Actuator
- **MD** No actuator (manually operated)
- **AD** Double-action actuator
- **AS** Spring-return actuator
- **AE** Electric actuator (Bernard OA8)

Solenoid for actuator (only for actuator types **AD** and **AS**)
- **1** 230 V AC 50 Hz 2 W (as standard)
- **2** 24 V DC 2.5 W
- **3** 115 V AC 60 Hz 2 W
- **4** 28 V DC 0.4 W

Solenoid explosion proof
- **0** No explosion proof
- **1** EExme II T5
- **2** EExia IIc T6

Position switches
- **0** None
- **X** Equipped with position switches
- **E** Position switch NAMUR, DIN 19234

Special options
- **Z1** For oxygen use
- **Z2** Process side flushing

Documentation

Installation and operating instructions
- **IE** English
- **IF** Finnish

Material certificates
- **0** No material certificate
- **MC1** SFS-EN 10204-2.1 (DIN50049-2.1)
- **MC2** SFS-EN 10204-2.2 (DIN50049-2.2)
- **MC3** SFS-EN 10204-3.1B (DIN50049-3.1B)

Specification example: PASVE pH D U2 0 O2 X AD3 1 E Z1 IEMC1

SATRON instruments
Satron Instruments Inc., P.O.Box 240, FIN-33201 Tampere, Finland
Tel. +358 3 387 1800, Telefax +358 3 387 1899, www.satron.com

PASVE pH Mounting & Service Valve

Pasve pH with pneumatic actuator

PASVE pHF
(Flange type)

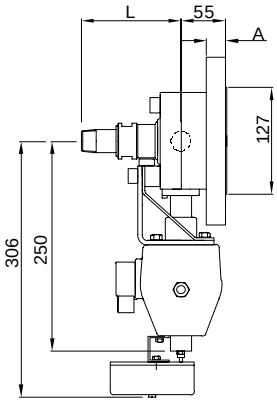

PASVE pHC
(Welded on container)

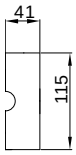

PASVE pHP
(Welded on pipe)

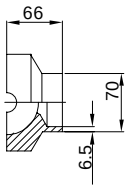

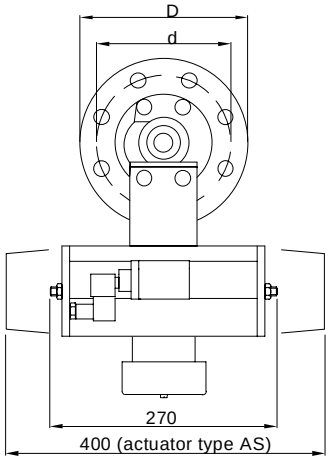

PASVE pHF

FLANGE Code	Type	ØD	Ød	A
A	ANSI 3" 150 lb	191	152.4	22
B	ANSI 3" 300 lb	210	168.3	27
D	DN80 PN40	200	160	22
E	JIS 10K 80	185	150	20
F	JIS 40K 80	210	170	30

PASVE pHB
(Welded on container, body 15º)

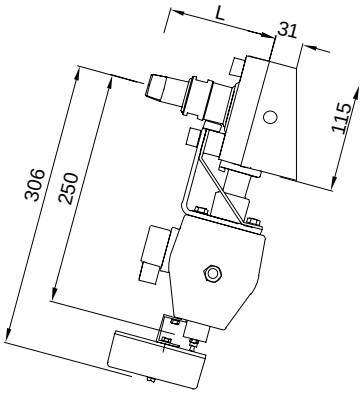

L depends on the sensor type

Dimensions (in mm)

PASVE pHT
(Flow-through, threaded connection)

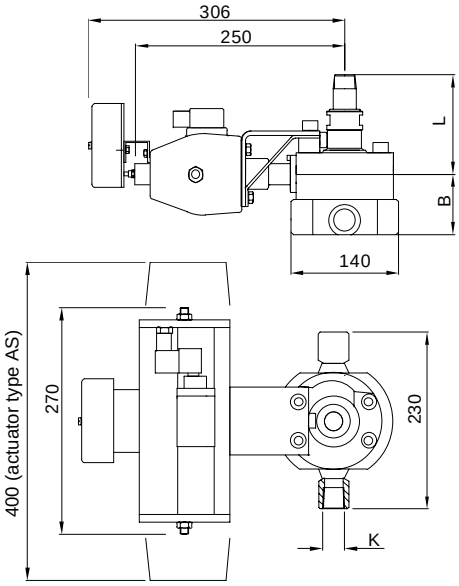

PASVE pHD
(Flow through, flange connection)

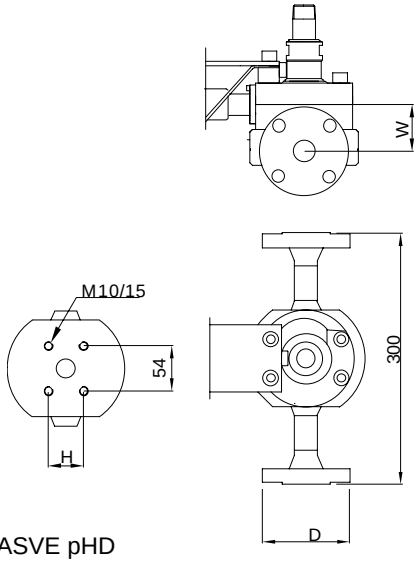

PASVE pHT

THREAD Code	Type (dim.K)	B	H
2	1" NPT	77	48
4	1.5" NPT	92	64
5	2" NPT	104	76

PASVE pHD

FLANGE Code	Type	W	ØD	H
H	ANSI 1" 150 lbs	55	108	48
J	ANSI 1" 300 lbs	55	124	48
U	ANSI 2" 150 lbs	68	153	76
V	ANSI 2" 300 lbs	68	165	76
G	DN25 PN40	55	115	48
T	DN50 PN40	68	165	76

OPERATING POSITIONS

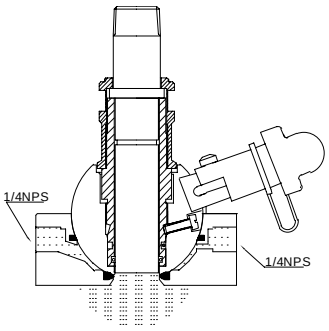

Measuring position
Sensor in measurement. Valve's and sensor's water cooling through flushing channel.

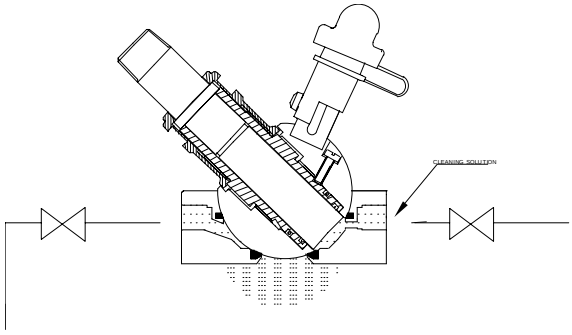

Servicing and calibration position
Sensor turned to cleaning, calibrating and protective position without stopping the process.

PATENTS

FI 71838
DE P3566577.7
KR 69579
US 4,628,732
GB 0197077
NL 0197077
FR 0197077
JP 2112935

PASVE SC/SP/ST Sampling Valve

The PASVE SC/SP/ST is a miniature ball valve which readily accepts commercially available septum hygienic rubbers. The PASVE SC/SP/ST provides you with the opportunity of taking hygienic samples from your process without interrupting the process.

The PASVE SC/SP/ST can be used in any industrial process where it is necessary obtain a sample from the process which is not influenced or contaminated from any outside disturbances.

The PASVE SC/SP/ST is a member of the Satron Pasve Series, which is commonly used with pH probes, oxygen sensors and Satron's high precision patented pressure and level transmitters.


PASVE SC


PASVE SP


PASVE ST

Technical Specifications

Material
Housing: AISI316L
Gasket: PTFE seal

Max. process pressure:
10 bar (150 psi)
(subject to type of rubber septum selected)

Max. process temperature:
120 °C (250 °F) (subject to type of rubber septum selected)

US Patent 4 628 732
FI Patent 71838
KR69579
DE P3566577.7
GB 0197077
EP 0197077
FR 0197077
NL 0197077

Operation

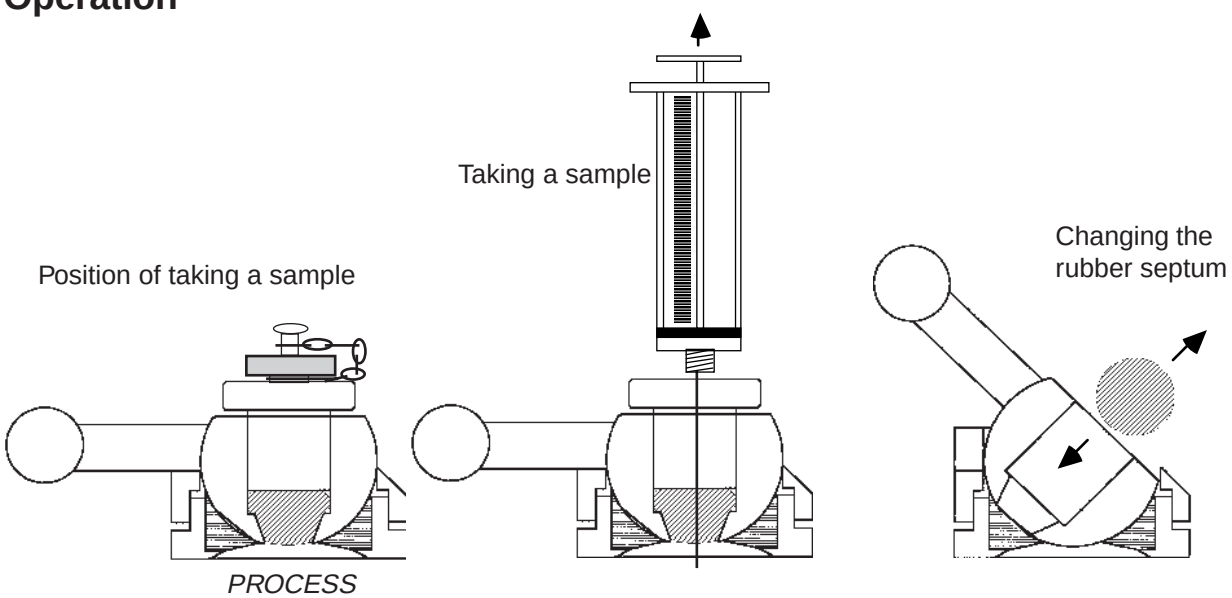

Satron Instruments Inc., P.O.Box 240, FIN-33201 Tampere, Finland
Tel. +358 3 387 1800, Telefax +358 3 387 1899

Dimensions

PASVE SC

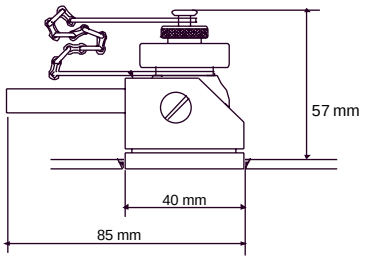

PASVE SP

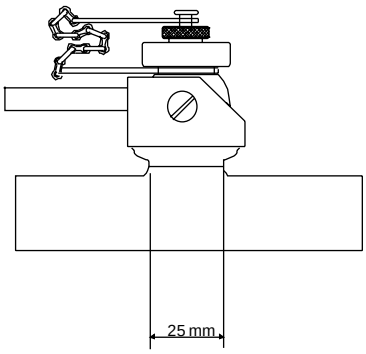

PASVE ST

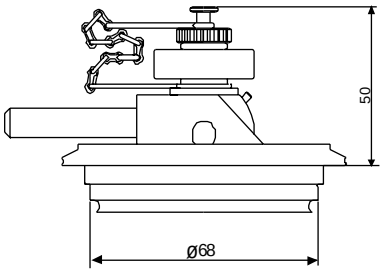

Mounting of PASVE SC/SP

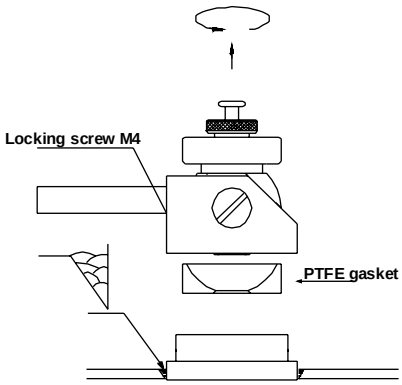

PASVE SC

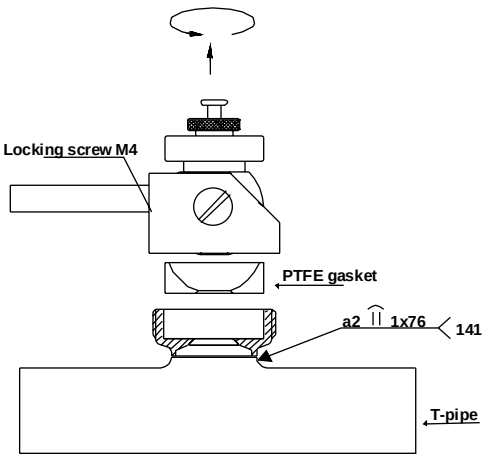

PASVE SP

1. Make a hole of 40 mm for the valve (type SC)
2. Open the locking screw
3. Remove the ball and gasket
4. Weld the frame using small rod (multiple seams)
5. Assemble the gasket and ball
6. Tighten the gasket (Do not use any tools)
7. Tighten the locking screw

Mounting of PASVE ST

PASVE ST will be fixed with clamp to the Tuchenhagen (Varivent, D = Ø 68) coupling.

Mounting couplings for Satron transmitters

Thread couplings

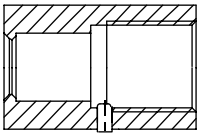

STANDARD COUPLING G1

Order numbers :

- AISI316L M546197
- Hastelloy -C M5461973
- Titanium M5461976

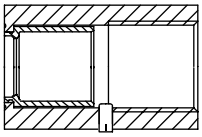

EExia COUPLING G1

Order numbers :

- AISI316L M546194
- Hastelloy -C M547886
- Titanium M547885

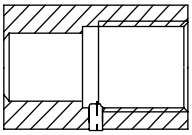

HYGIENIC COUPLING G1

Order numbers :

- AISI316L M548101
- Hastelloy -C M548102
- Titanium M548103

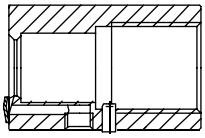

STANDARD COUPLING G1 WITH CLEANING

Order numbers :

- AISI316L M1050020
- Hastelloy -C M10500203

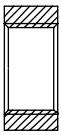

THREADED STEEL PIPE FITTING, G1
(FOR COUPLING G1/G1A)

Order number M1050220

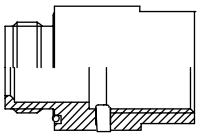

COUPLING G1/ G1A

Order numbers :

- AISI316L M1050002
- Hastelloy -C M10500023

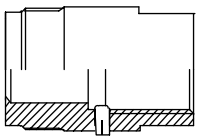

COUPLING G1 / M44x1.25 (PMC)

Order numbers :

- AISI316L M1050004
- Hastelloy -C M10500043

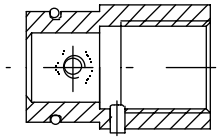

COUPLING G1 / PMC 1.5"

Order numbers :

- AISI316L M1050010
- Hastelloy -C M10500103

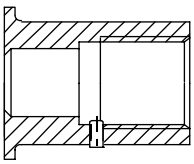

COUPLINGS SMS-STANDARD :

COUPLING G1 / SMS 38
Order number M1050265

COUPLING G1 / SMS 51
Order number M1050267

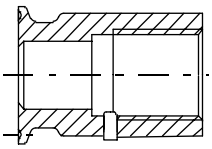

HYGIENIC COUPLINGS ISO2852 STANDARD :

COUPLING G1 / TRI-CLAMP 38	M1050206
COUPLING G1 / TRI-CLAMP 40	M1050222
COUPLING G1 / TRI-CLAMP 51	M1050223
COUPLING G1 / TRI-CLAMP 63.5	M1050224
COUPLING G1 / TRI-CLAMP 70	M1050225
COUPLING G1 / TRI-CLAMP 76.1	M1050226
COUPLING G1 / TRI-CLAMP 88.9	M1050227
COUPLING G1 / TRI-CLAMP 101.6	M1050228
COUPLING G1 / TRI-CLAMP 114.3	M1050229
COUPLING G1 / TRI-CLAMP 139.7	M1050230

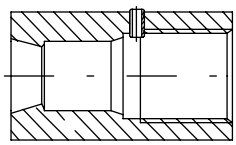

EXTENDED COUPLING G1

Order number M1050292

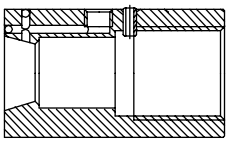

EXTENDED COUPLING G1 with cleaning

Order number M1050293

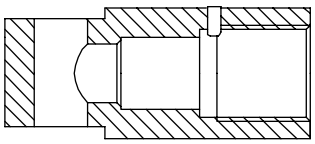

COUPLING G1 for small pipe

Order numbers :

- DN15 M1050295
- DN 20 M1050296

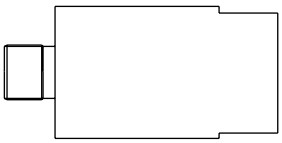

COUPLING G1 / G1/2A

Order number M546190

COUPLING G1 / 1/2-NPT

Order number M551566

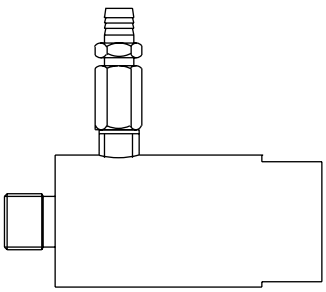

COUPLING G1 / G1/2A + DRAIN VALVE

Order number M860280

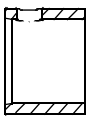

COUPLING PMC 1" (for type HL)

Order number M1050300

We reserve the right to make technical changes without prior notice.

SATRON instruments

Satron Instruments Inc., P.O.Box 240, FIN-33201 Tampere, Finland
Tel. +358 3 387 1800, Telefax +358 3 387 1899

Mounting couplings for Satron transmitters

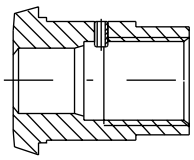

COUPLINGS DIN11887-STANDARD :

COUPLING G1 / NS40
Order number M1050312
COUPLING G1 / NS50
Order number M1050313
COUPLING G1 / NS65
Order number M1050314

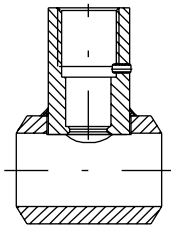

COUPLING G1 for pipes DN15 - DN40

Order numbers :
- DN15 M105001615
- DN20 M105001620
- DN25 M105001625
- DN32 M105001632
- DN40 M105001640

Special ADAPTER for COUPLING G1 (PN40) (it's possible to install the sensor head deep to the process coupling)
Order number : M1050294

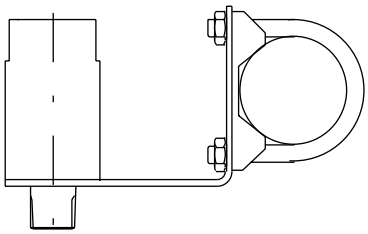

COUPLING G1 / G1/2A (outside)
(with mounting bracket)
Order number M546195
COUPLING G1 / 1/2-NPT (outside)
(with mounting bracket)
Order number M1050017

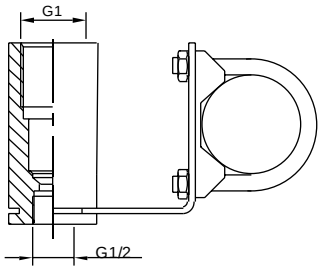

COUPLING G1 / G1/2 (inside)
(with mounting bracket)
Order number M550393

Flange couplings

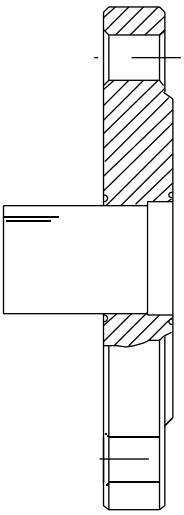

FLANGE TYPE	COUPLING TYPE					
	G1 std.	G1 std. HC	G1 hyg.	G1 hyg. HC	G1 Exi	G1 Exi HC
	ORDER NUMBER	ORDER NUMBER	ORDER NUMBER	ORDER NUMBER	ORDER NUMBER	ORDER NUMBER
DN25 PN40	M548832	M5488323	M548833	M5488333	M548834	M5488343
DN40 PN40	M551267	M5512673	M551268	M5512683	M552361	M5523613
DN50 PN40	M860282	M8602823	M548830	M5488303	M548831	M5488313
DN80 PN40	M860281	M8602813	M548828	M5488283	M548829	M5488283
DN100 PN40	M552364	M5523643	M5523640	M552364 03	M5523641	M552364 13
ANSI1"150LBS	M552365	M5523653	M5523650	M552365 03	M5523651	M552365 13
ANSI1"300LBS	M548861	M5488613	M548862	M5488623	M548863	M5488633
ANSI2"150LBS	M552367	M5523673	M5523670	M552367 03	M5523671	M552367 13
ANSI2"300LBS	M548864	M5488643	M548865	M5488653	M548866	M5488663
ANSI3"150LBS	M551564	M5515643	M5515640	M551564 03	M5515641	M551564 13
ANSI3"300LBS	M548867	M5488673	M548868	M5488683	M548869	M5488693
ANSI4"150LBS	M552371	M5523713	M5523710	M552371 03	M5523711	M552371 13
ANSI4"300LBS	M552372	M5523723	M5523720	M552372 03	M5523721	M552372 13
FOR GASKET CHANNEL : (DIN 2512N)						
DN25 PN40	M548825	M5488253	M548826	M5488263	M548827	M5488273
DN50 PN40	M548822	M5488223	M548823	M5488233	M548824	M5488243
DN80 PN40	M548819	M5488193	M548820	M5488203	M548821	M5488213

Multidimensional coupling flange

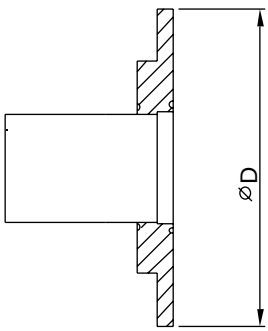

Ø D	COUPLING TYPE					
	G1 std.	G1 std. HC	G1 hyg.	G1 hyg. HC	G1 Exi	G1 Exi HC
	ORDER NUMBER	ORDER NUMBER	ORDER NUMBER	ORDER NUMBER	ORDER NUMBER	ORDER NUMBER
Ø 92	M1050030	M105003 03	M1050031	M105003 13	M1050032	M105003 23
Ø 127	M1050033	M105003 33	M1050034	M105003 43	M1050035	M105003 53

Measurements with hydraulic pressure seal

The hydraulic pressure seal helps to solve many installation problems caused, for instance, by high temperatures, sedimentation and crystallization. Toxicity of the process medium or some other effect that can be harmful to the environment may also require the isolation of the process from its surroundings. DN50, DN80 and ANSI3 hydraulic pressure seals are suitable for pressure measurements in open and closed vessels.

General instructions

Make sure that there are good reasons for using a pressure seal. The best way to connect pressure measurement to process is impulse piping.

We recommend applying the following general instructions:

- seal size standardization (see Figure 1); DN80 or ANSI3" up from measuring ranges 60 mbar DN50 or ANSI2" up from measuring ranges 400 mbar
- protect capillary tubes and flanges (see Protecting the equipment and Temperature effect)
- use the same size of seal flanges for both (+) and (-) flanges
- use the same lengths of capillary tubes for differential pressure measurements
- check the zero point after installation

By observing these instructions you can avoid many factors of inaccuracy caused by the seal principle; a liquid in sealed state undergoes volume and viscosity changes when its temperature changes.

Choosing the suitable equipment

The factors to be considered when choosing the measuring device and hydraulic pressure seal include volumetric displacements, negative pressure limitations and temperature effect.

The volumetric displacement capacity of the hydraulic pressure seal must be sufficient. The magnitude of volumetric displacements can be calculated by summing the measuring device's volumetric displacement with that caused by thermal expansion of the fill fluid. The result must not exceed the hydraulic pressure seal's volumetric displacement capacity. More information can be found in the technical specifications of measuring devices and hydraulic pressure seals.

Special attention will be required if type DN50 and ANSI2" pressure seals are used at pressures below 400 mbar, and type DN70, DN80 and ANSI3" pressure seals at pressures below 60 mbar. Type DN50 and ANSI2" seals are not recommended for ranges below 150 mbar, and type DN70, DN80 and ANSI3" seals for ranges below 25 mbar.

Connecting the measuring device to the hydraulic pressure seal

Pressure gauge or limit switch is connected to the hydraulic pressure seal with an adapter base or capillary tube. When using an adapter connection, the temperature of the process medium must not exceed 60°C.

Differential pressure transmitter is always connected through capillary tube.

The connection between hydraulic pressure seal and measuring device must be made with correct methods. When deciding on the connection method you should take into account the fact that gaseous media and moisture normally absorbed in the fill fluid will exit the fluid. It is recommendable to have the hydraulic pressure seals filled and connected by SATRON INSTRUMENTS INC.

Protecting the equipment

Hydraulic pressure seals, capillary tubes and measuring device should be protected against low temperatures and temperature variations. Low ambient temperatures will cause a lag in the measurement, while temperature variations will change the zero setting.

Capillary tubes can be protected with thermal insulation. Electric resistance elements or steam heating can also be used as protective methods.

Temperature effect on measuring speed and accuracy

Stiffening and thermal expansion of the fill fluid limit the permissible ambient temperature range. The properties of fill fluids determine the ambient temperatures that suit the hydraulic pressure seal connection. Temperature effect is defined as combined zero and span effect. 95% of total effect consist of zero effect and the remaining 5 % of span effect.

Calibration

Factory-filled hydraulic pressure seal assemblies are adjusted for the values specified by the customer.

During the adjustment procedure the pressure seals and transmitters are at equal height. The calibration temperature is 20°C.

When defining the calibration values you must take into account the difference in height between seal flanges and transmitter, because the hydrostatic pressure of the fill fluid affects the zero adjustment. Zero suppression and elevation can be determined as shown in examples 1 and 2.

The temperatures of capillary tubes, transmitter and pressure seal flanges affect the zero. The coefficients given in the technical specifications can be utilized when defining the calibration values for a specific temperature distribution.

The total effect of seal flange locations and temperature distribution on zero suppression can be determined by summing the partial effects . The signs must be taken into account in the calculations.

Installation

The measuring device, capillary tubes and hydraulic pressure seal comprise a calibrated assembly whose connections should not be opened. For this reason the installation and equipment should be planned so that opening the connections will not be necessary during installation.

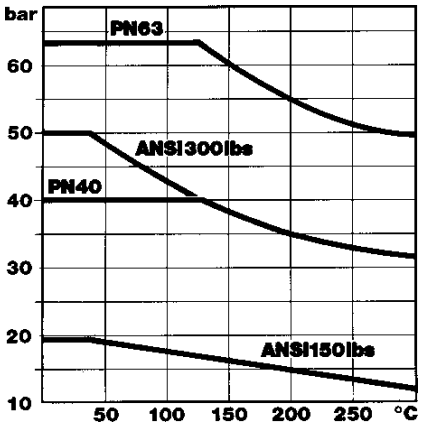

Figure 1: Permissible pressure on seal flange at different temperatures

Satron Instruments Inc., P.O.Box 240, FIN-33201 Tampere, Finland
Tel. +358 3 387 1800, Telefax +358 3 387 1899

Example 1: Open vessel (Fig. 2)

Span p_1, is as follows:

$P_1 = h_1 \rho g$

$= 3.50\ m \times 980\ kg/m^3 \times 9.81\ m/s^2$

$= 33.6\ kPa$

Zero suppression p_2 is as follows:

$P_2 = (h_2\rho + h_3\rho_O) \times g$

$= (1.00\ m \times 980\ kg/m^3 + 0.90\ m \times 960\ kg/m^3 \times 9.81\ m/s^2$

$= 18.1\ kPa$

Example 2: Closed vessel (Fig. 3)

Span p_1, is as follows:

$P_1 = h_1 \rho g$

$= 3.50\ m \times 980\ kg/m^3 \times 9.81\ m/s^2$

$= 33.6\ kPa$

Zero elevation (suppression) p_2 is as follows:

$P_2 = (h_3 - h_4)\ \rho_O g + h_2 \rho g =$
$(0.90 - 6.00)m \times 960\ kg/m^3 \times 9.81\ m/s^2 + 1.00\ m \times 980\ kg/m^3 \times 9.81\ m/s^2$

$P_2 = -38.4\ kPa$ (negative result = elevated-zero range)

h_1 = difference in height between maximum and minimum level (3.50 m)
h_2 = height of minimum level from (+) - flange (1.00 m)
h_3 = difference in height between (+)- flange and transmitter (0.90m)
h_4 = difference in height between (-)-flange and transmitter (6.00 m)
ρ = density of measured fluid (980 kg/m^3)
ρ_O = density of fill fluid (960 kg/m^3)
g = acceleration of gravity (9.81 m/s^2)

NOTE: If transmitter is higher than the (+)-flange, the difference h_3 will have a negative value.

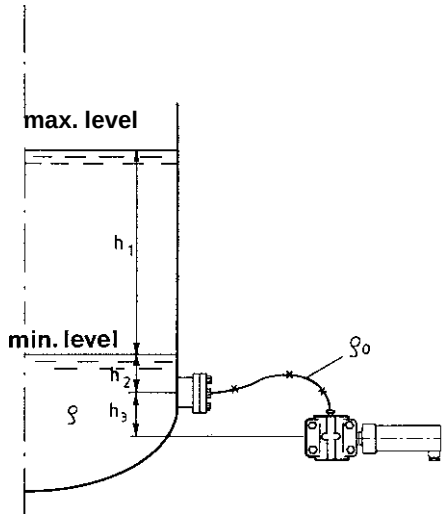

Figure 2: Level measurement in open vessel

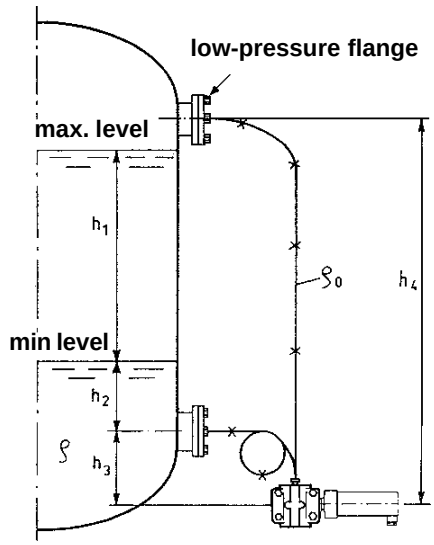

Figure 3: Level measurement in closed vessel

Installation

Measuring device, capillary tubes and hydraulic pressure seal comprise a calibrated assembly whose connections should not be opened. For this reason the installation and equipment should be planned so that opening the connections will not be necessary during installation.

Table: Mounting accessories (Fig.4)

1. Process flange DN80
2. Nut M16, AISI 316
3. Hex. screw M16 × 70
4. Gasket DN80
7. Mounting bracket

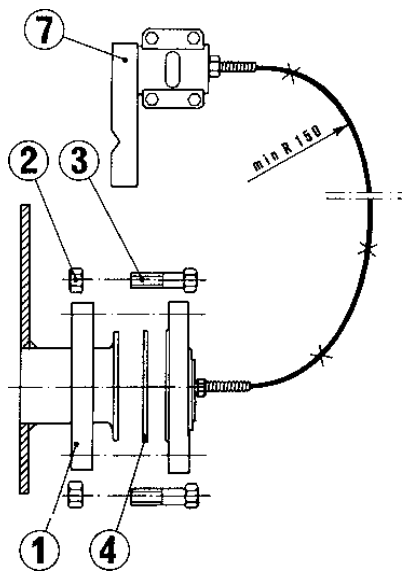

Questionnaire for choosing the hydraulic pressure seal

Customer: _____

Address: _____

1. Process medium

Name and analysis: _____

Density: _____

Material for wetted parts: _____

2. Process pressure specification

Pressure (differential pressure): _____

Pressure variation limits: _____ frequency: _____

Maximum static pressure: _____

Maximum overload pressure: _____

Any negative pressures?: ____ yes _____ no

3. Operating temperatures

3.1 Temperatures during measurement

Process: _____ °C Variation: _ _____ °C to _____ °C

Ambient: _____ °C Variation: _ _____ °C to _____ °C

Measuring device: _____ °C Variation: _____ °C to _____ °C

3.2 Highest temperature when equipment is not in measurement (e.g. during cleaning): _____ °C

3.3 Lowest absolute pressure and simultaneous temperature at hydraulic pressure seal:

_____ mbar (abs) _____ °C

4. Capillary tubes

Length:_____ m, Number of pressure seals: _____

Heating:_____ yes, _____ no, Temperature _____ °C, Variation_____°C

5. Purpose of measurement

Level measurement:_____ Fig. 2, or _____ Fig. 3 (see page 5/02)

Pressure measurement: _____ Fig. 4 (see page 5/02)

Other: _____

6. Installation specification

Span (h_1): _____

Difference in height between minimum level and (+)-flange (h_2): _____

Difference in height between (+)-flange and measuring device (h_3): _____

Difference in height between (-)-flange and measuring device (h_4): _____

7. Equipment specification

Selected equipment _____

_____

_____

HPS Hydraulic Pressure Seal

BP415
2000-02-25

The Hydraulic Pressure Seal **HPS** is used in pressure measurement applications where the process medium is aggressive and it is necessary to protect the wetted parts of measuring transmitters. Processes' hygienic requirements may also necessitate the use of the pressure seal.
In addition, the pressure seal has to be used when the process temperature exceeds the transmitter's specifications.

Technical specifications

Process connections
- DN50, DN80 (ISO2084-1974)
- ANSI2" and 3" (ANSI B16-5)
- Sandvik Clamp connector DN65
- TRI-Clamp 2" and 2,5" (51/63,5 mm, ISO2852)

Other options available on separate order.

Process pressures
- PN40
- 150 and 300 lbs
- Sandvik Clamp: PN64
- TRI-Clamp: PN30

Measurement ranges
Above 25 mbar span, depending on the measuring diaphragm's size and the process pressure.

Materials
HPS body: AISI 316
Process coupling (Type S): AISI 316

Capillary tube
- Capillary: AISI 316
- Casing: AISI 316

Length selectable between 2 and 20 m. Recommendation: As short as possible. The capillary's minimum permissible bending radius is 50 mm. We recommend capillaries of equal length for differential pressure measurements in varying temperature conditions.

Diaphragm materials
AISI 316L, Hastelloy C-276 and tantalum.

Fill fluids
Silicone oil DC200
- for process and food industry applications

Neobee M20
- for food industry applications

Inert oil (e.g. Halocarbon)
- for oxygen and chlorine applications

Silicone oil DC705
- for high-temperature and vacuum measurement applications

Gaskets (Types S and TRI-C)
- EPDM, std.

Viton and PTFE available on separate order for Type S.

Fill fluid properties

Fill fluid	**Temperature range/**°C	**Density** g/cm³	**Thermal expansion coefficient/** 1/°C	**Viscosity** (25°C) cSt(mm²/s)
DC200 Silicone oil	-40...200	0.934	0.00108	9.5
DC705 Silicone oil	20...380	1.090	0.00080	175
Inert oil	-45...175	1.850	0.000864	6.5
Neobee M20	-17...200	0.917	0.001008	9.8

Fill fluid steam pressure curves (specified by manufacturers)

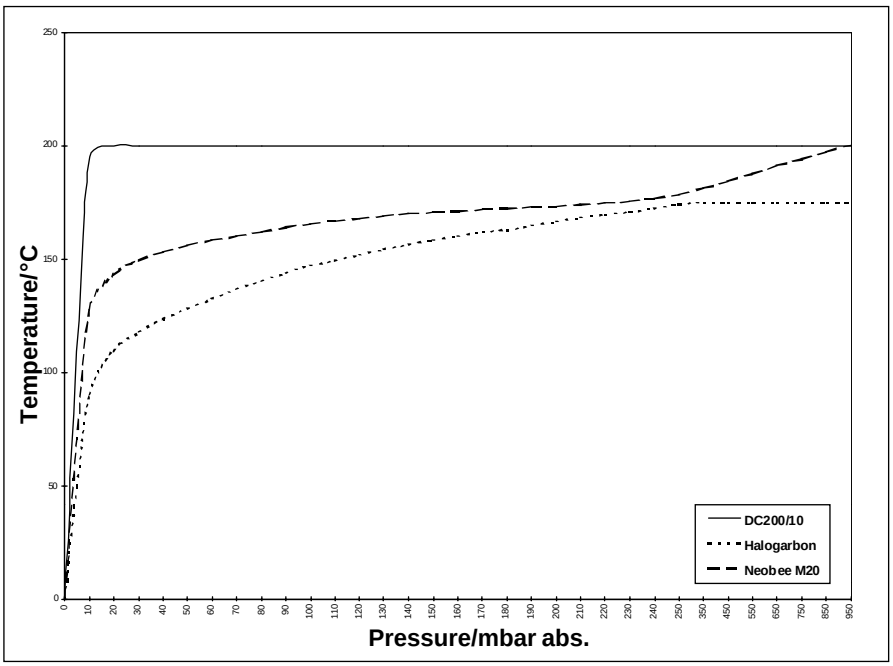

Satron Instruments Inc., P.O.Box 240, FIN-33201 Tampere, Finland
Tel. +358 3 387 1800, Telefax +358 3 387 1899

HPS types: construction and installation

Type D Mounted between two flanges

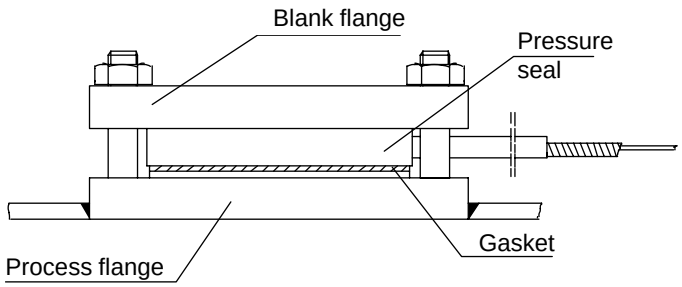

Type TRI-C

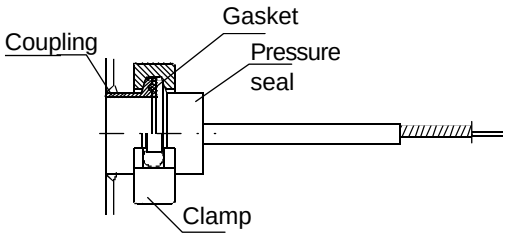

Type F
Flange-mounted pressure seal

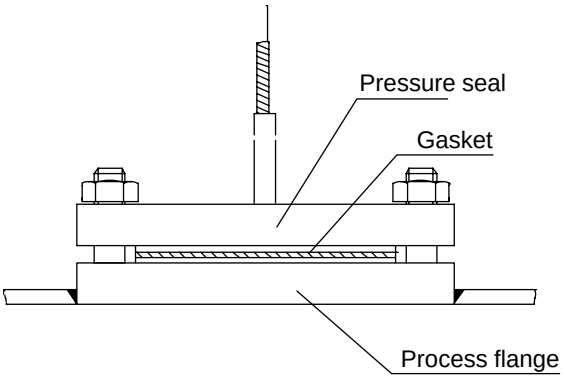

Type FE
Flange-mounted with extension

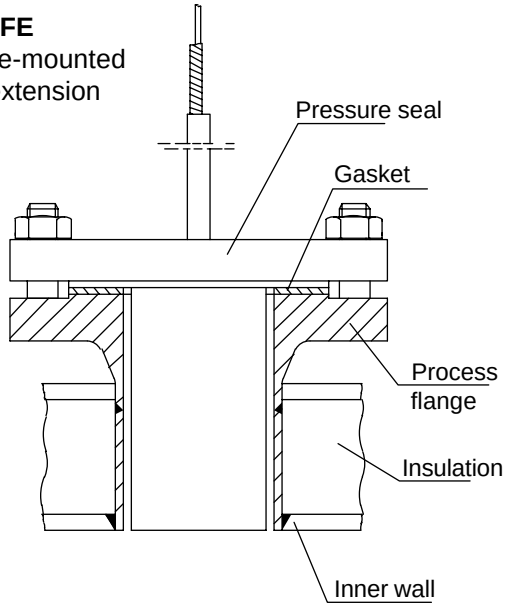

Type S
Mounted on Sandvik Clamp

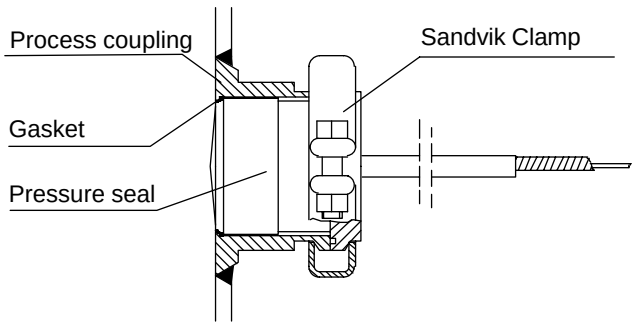

Type S - Coupling installation

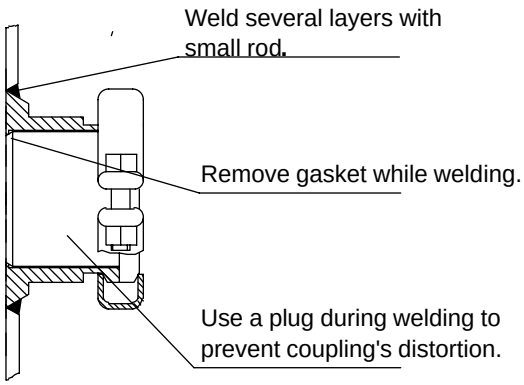

Type S - Mounting parts

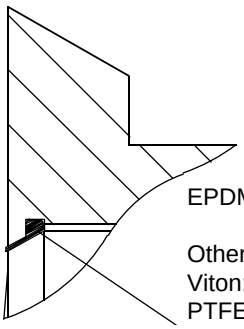

EPDM gasket (standard)

Other gasket options:
Viton: T1051204
PTFE: T1051203

Type S - Plug

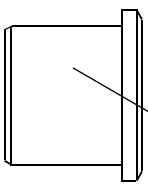

The plug is also needed while welding the process coupling.

Plug options:
T549804, length 53 mm
T549805, length 104 mm
T549806, length 155 mm

Mounting dimensions

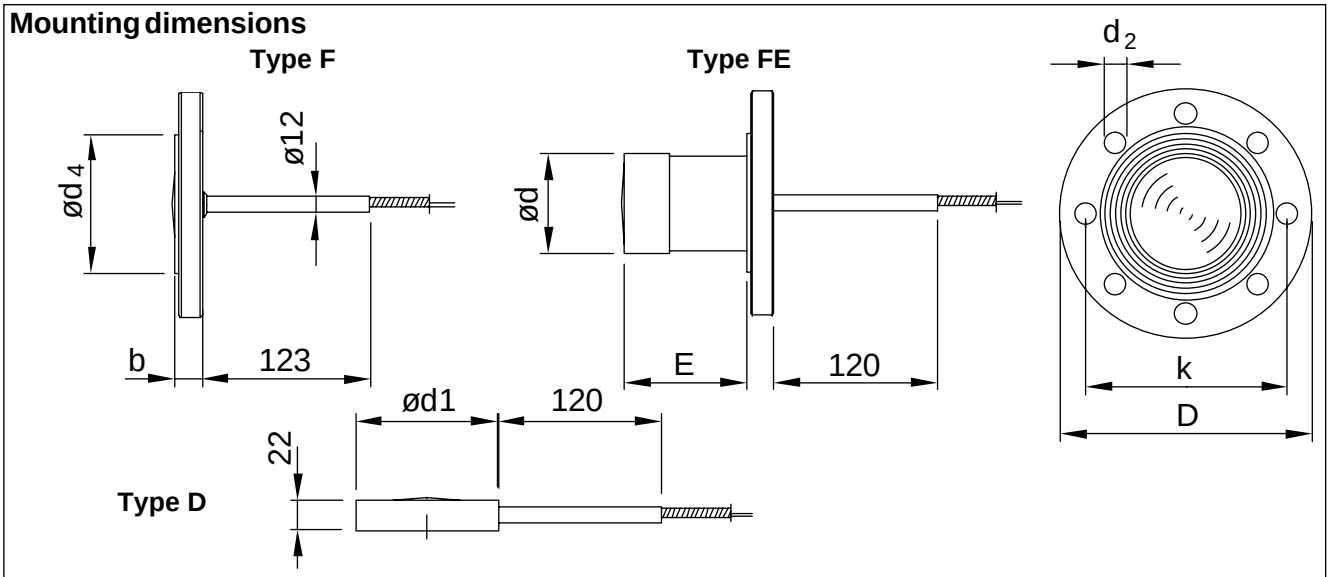

FLANGE SIZE	FLANGE DIMENSIONS				HOLES			EXTENS.
	b	D	Ød4	Ød1	Qty	d2	k	Ød ±0.3
ISO DN50 PN40	20	165	102	105	4	18	125	51
ISO DN80 PN40	24	200	138	140	8	18	160	73
ANSI 2" 150 lbs	23	152	92	99	4	20	120.6	51
ANSI 2" 300 lbs	25	165	92	105	8	20	127	51
ANSI 3" 150 lbs	26	191	127	130	4	20	152.4	73
ANSI 3" 300 lbs	31	210	127	143	8	23	168.3	73

CODE	E +0.4 -0.4
2	51
4	102
6	152

Selection tables

HPS D

Seal size
DN50 PN40
DN80 PN40
ANSI2 150
ANSI2 300
ANSI3 150
ANSI3 300

Diaphragm material
2 AISI316L
3 Hastelloy C-276
5 Tantalum

Fill fluid
S Silicone oil DC200
A Neobee M20
G Inert oil
D Silicone oil DC705

Capillary length (m)
2...20

Documentation
IE English
IF Finnish

Material certificates
0 No material certificate
MC1 SFS-EN 10204-2.1 (DIN50049-2.1)
MC2 SFS-EN 10204-2.2 (DIN50049-2.2)
MC3 SFS-EN 10204-3.1B (DIN50049-3.1B)

HPS F(E)

Seal size
DN50 PN40
DN80 PN40
ANSI2 150
ANSI2 300
ANSI3 150
ANSI3 300

Extension length (E)
0 No extension
2 Extension 51 mm
4 Extension 102 mm
6 Extension 152 mm

Diaphragm material
2 AISI316L
3 Hastelloy C-276
5 Tantalum

Fill fluid
S Silicone oil DC200
A Neobee M20
G Inert oil
D Silicone oil DC705

Capillary length (m)
2...20

Documentation
IE English
IF Finnish

Material certificates
0 No material certificate
MC1 SFS-EN 10204-2.1 (DIN50049-2.1)
MC2 SFS-EN 10204-2.2 (DIN50049-2.2)
MC3 SFS-EN 10204-3.1B (DIN50049-3.1B)

HPS for hygienic installations, eg. food industry

Mounting dimensions type S

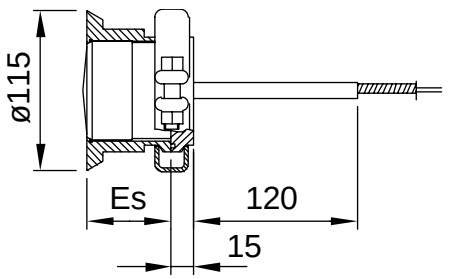

CODE	Es +0.1 - 0.3
2	54.5
4	105
6	156

Selection table type S

HPS S ☐☐☐☐☐☐☐

Seal extension (Es)
2 Extension 54.5 mm
4 Extension 105 mm
6 Extension 156 mm

Mounting parts
0 No mounting parts
2 Mounting parts 54.5 mm
4 Mounting parts 105 mm
6 Mounting parts 156 mm
(Mounting parts: Coupling, gasket, clamp)

Diaphragm material
2 AISI316L
3 Hastelloy C-276
5 Tantalum

Fill fluid
S Silicone oil DC200
A Neobee M20
G Inert oil
D Silicone oil DC705

Capillary length (m)
2...20

Documentation
IE English
IF Finnish

Material certificates
0 No material certificate
MC1 SFS-EN 10204-2.1 (DIN50049-2.1)
MC2 SFS-EN 10204-2.2 (DIN50049-2.2)
MC3 SFS-EN 10204-3.1B (DIN50049-3.1B)

Selection table type TRI-C

HPS TRI-C ☐☐☐☐☐☐☐

Seal size
51 (2")
63.5 (2,5")

Mounting parts
0 No mounting parts
1 Mounting parts 51
2 Mounting parts 63.5

(Mounting parts: Coupling, gasket, clamp)

Diaphragm material
2 AISI316L
3 Hastelloy C-276
5 Tantalum

Fill fluid
S Silicone oil DC200
A Neobee M20
G Inert oil
D Silicone oil DC705

Capillary length (m)
2...20

Documentation
IE English
IF Finnish

Material certificates
0 No material certificate
MC1 SFS-EN 10204-2.1 (DIN50049-2.1)
MC2 SFS-EN 10204-2.2 (DIN50049-2.2)
MC3 SFS-EN 10204-3.1B (DIN50049-3.1B)

Mounting dimensions type TRI-C

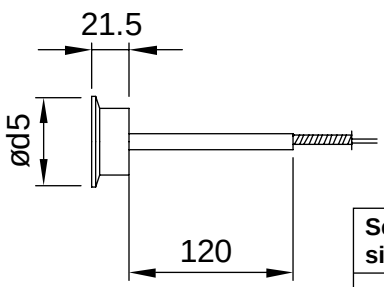

Seal size	Ød5
51 (2")	64
63.5 (2,5")	77,5

ACTUATORS

- PISTOR 75 pneumatic power cylinder ..... Spec. EZ510

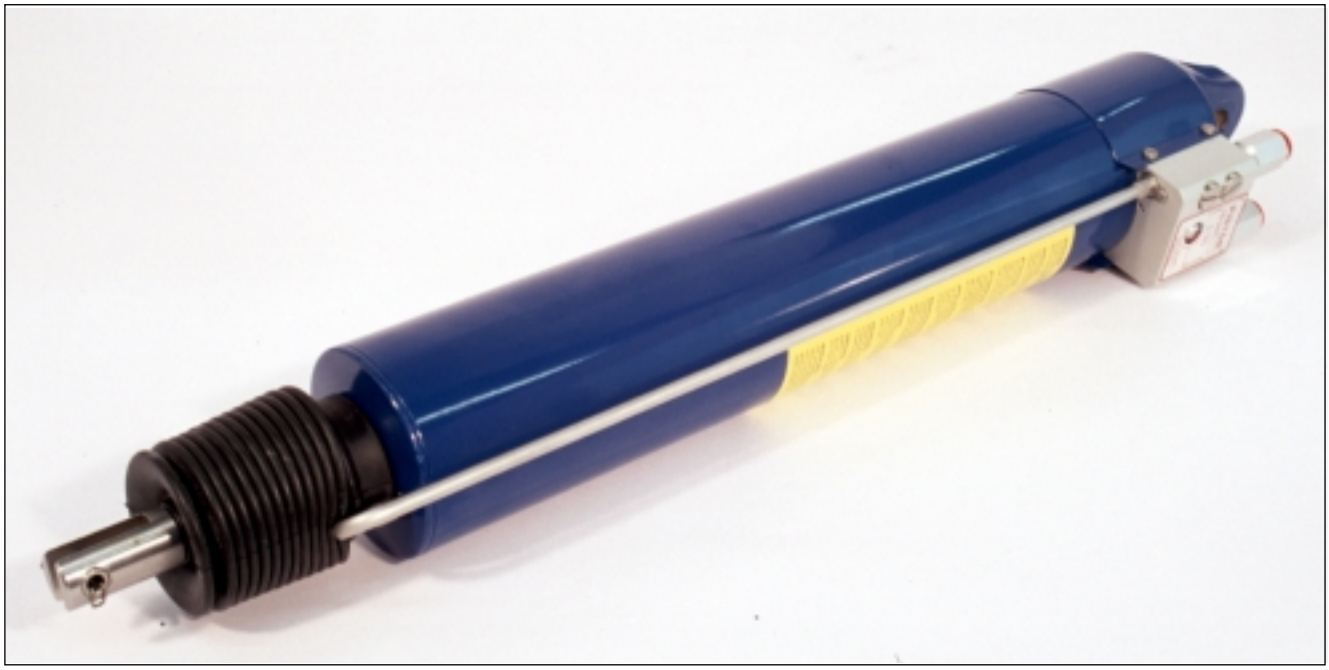

Satron Instruments Inc., P.O.Box 240, FIN-33201 Tampere, Finland
Tel. +358 3 387 1800, Telefax +358 3 387 1899

PISTOR 75

pneumatic power cylinder

EZ510
Febr. 15, 1989

The pneumatic PISTOR power cylinder can be used as an actuator in manual and automatic control of control valves and louvers.

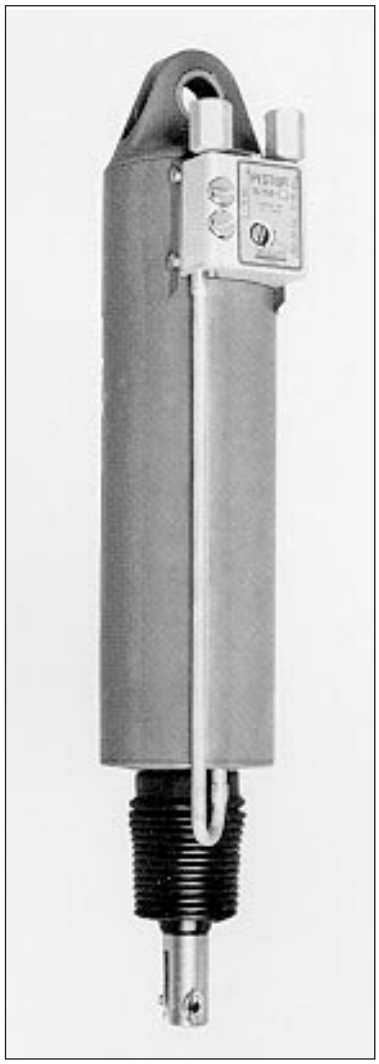

Technical specification

	Type	
	PISTOR 75/150	**PISTOR 75/300**
Piston diameter:	75 mm	75 mm
Stroke S:	150 mm	300 mm
Effective cross-sectional area of piston:	41 cm^2	41 cm^2
Output force		
- for 3 bar supply pressure:	1200 N	1200 N
- for 6 bar supply pressure:	2400 N	2400 N
Output work (moment of force)		
- for 3 bar supply pressure:	180 Nm	360 Nm
- for 6 bar supply pressure:	360 Nm	720 Nm
Typical time for full stroke:	12 s	20 s
Weight:	2.8 kg	3.4 kg

Supply pressure: 3 to 6 bar.

Control pressure range
- with standard adjustment:
  0.2 to 1.0 bar
- on separate order:
  0.4 to 0.9 bar spans.

Operating temperature:
-10 to +80 °C

Air consumption
- for 3 bar supply pressure:
  15 litres/min (at STP)
- for 6 bar supply pressure:
  25 litres/min (at STP)

Max. error of adjustment: ± 2 %.

Sensitivity: 0.3 %.

Load effect
- for a load change from 0 to 80 % of the max. force obtainable for the supply pressure in use, the effect is 4 % of max.stroke per 1000 N.

Materials
- body: light alloy with epoxy powder paint, bearing bush of bronze
- piston rod: ground and polished AISI 316 acid-resistant steel
- piston and 0-rings: silicone rubber (max. 80°C).

Connections
- 1/4-18NPSF female threads.

We reserve the right to make technical changes without prior notice.
Performance is indicated in accordance with IEC546 and IEC770 recommendations.

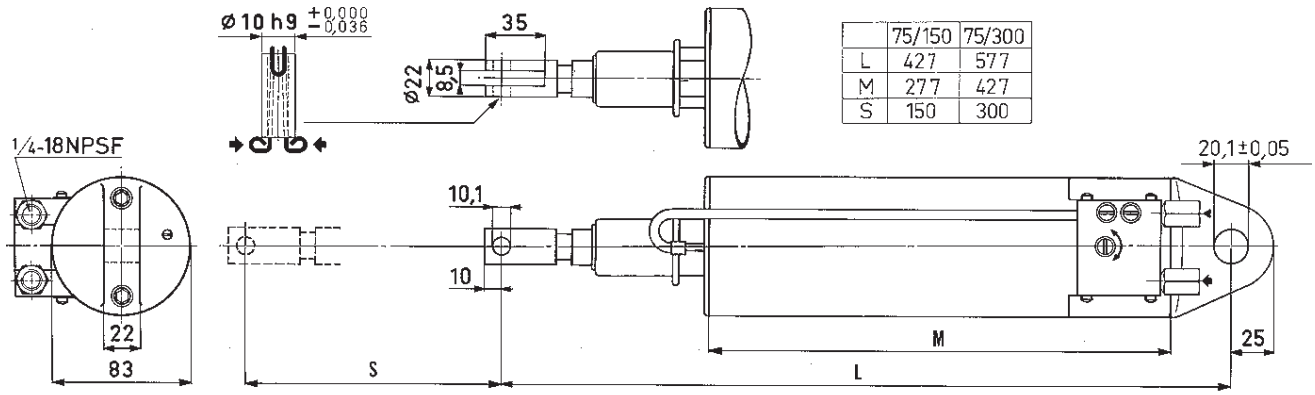

	75/150	75/300
L	427	577
M	277	427
S	150	300

SATRON instruments

Satron Instruments Inc., P.O.Box 240, FIN-33201 Tampere, Finland
Tel. +358 3 387 1800, Telefax +358 3 387 1899

Temperature measurement

Our instruments for temperature measurement:

TEMP-EL CNR temperature transmitter mounted in sensor junction box ..... Spec. BT700

TEMP-EL BNR temperature transmitter mounted on terminal board..... Spec. BT710

Selecting the sensor

Temperature sensing elements are not included in the price of the transmitters. The customer must therefore purchase the sensor separately.
The application's requirements must be taken into account when choosing the sensor:
- temperature range
- sensor's mechanical strength (pressure, vibration, shocks)
- sensor's chemical resistance (corrosion)
- measurement accuracy requirements
- response time/time constant
- sensor's compatibility with transmitter in use.

A protective tube can be used for mechanical protection of the sensor. The resultant measurement lag must then be taken into account. The sensor manufacturer's instructions and recommendations should be observed in installation.

Selecting the measurement point

The temperature of a medium flowing in a pipework - especially the temperature of gas - varies constantly even at the same point. The temperature sensor's own heat capacity and imperfect conduction of heat will cause lag and inaccuracy in the measurement. For these reasons it is only possible to measure average temperature. In general, the temperature sensing element or thermometer should be installed in the region of the highest flow velocity. A pipe bend is the most advantageous point in this respect (Fig. 1a). If strength considerations at high pressures prevent this arrangement, the installation shown in Fig. 1b will be used. The tip of the sensor should reach slightly past the centerline of the pipe. However, the installation should always be such that no vibration will occur in the sensor. The effect of thermal radiation can be reduced by using a polished shield.

Figure 1

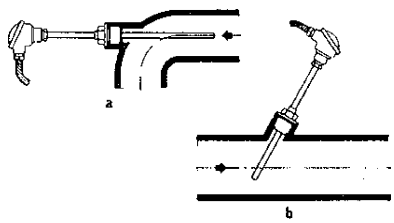

Figure 2 shows the different positions of the mounting boss. Sensor or thermometer is usually mounted perpendicularly (a). If dimension N is greater than 3/4 of the pipe diameter, position b will be used.

Figure 2

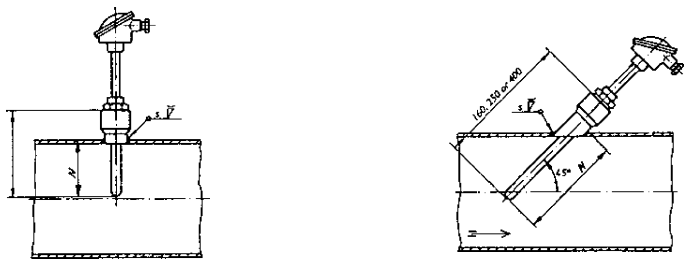

a) b)

TEMPERATURE TRANSMITTERS

Res istance element transmitters

TEMP-EL CNR (-50 to 800 °C)
- installed in junction box (DIN 43729 B)
- fixed ranges
- Pt100 sensing element
- no electrical isolation
- EEx ib IIC T6 construction
- economical

TEMP-EL BNR (-50 to 800 °C)
- installed on terminal board (AFTBI or AFTBI6)
- fixed ranges
- Pt100 sensing element
- no electrical isolation
- no Ex approval
- economical

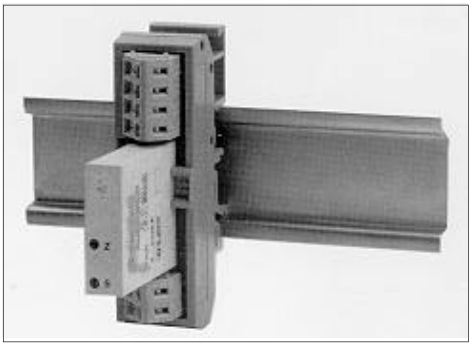

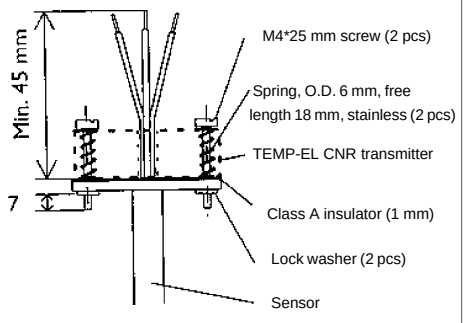

TEMP-EL CNR mounting example

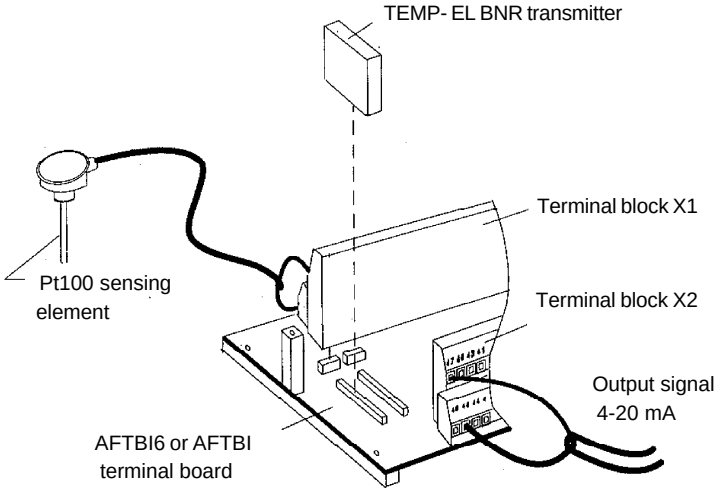

Installation of TEMP-EL BNR temperature transmitter

TEMP-EL CNR

Temperature transmitter mounted in sensor junction box

BT700
2003-02-12

TEMP-EL CNR is a Pt100 temperature transmitter mounted in DIN43729 B-type sensor head (junction box).

TECHNICAL SPECIFICATIONS

Measuring ranges

Product Number	Range
•M899375	-50...+50°C
•M899376	0...50°C
•M899377	0...100°C
•M899378	0...150°C
•M899379	0...200°C
M899380	0...250°C
•M899381	0...300°C
M899382	0...350°C
•M899383	0...400°C
M899384	0...450°C
M899385	0...500°C
M899386	0...550°C
•M899387	0...600°C
M899388	0...650°C
M899389	0...700°C
M899390	0...750°C
M899391	0...800°C

• Storage options

Functional specifications

Output signal (linear relative to temperature): 4 - 20 mA

Output with break in Pt100 element (current limit): approx. 26 mA

Output with sensor circuit shorted at transducer terminals: < 3 mA

Permissible terminal voltage: 9 - 35 V DC

Sensor current: 2 mA

Permissible ambient temperature: -25 to +70°C

Sensor wiring: 3-wire system

Range adjusting limits (trimmers):
- Zero ±5 %
- Span ±5 %

Overvoltage capacity: The transducer withstands a 1 MHz burst in accordance with IEC 255, 4 App. E across the signal conductors; (amplitude 500 V, repetition frequency 400 Hz, test duration 2 s).

Performance specifications [1)]

Measurement error relative to Pt100 sensor's table values (DIN 43760, terminal voltage 24 V, ambient temperature 23°C, 3-wire system, wire resistance < 0.2 Ω)
- on -50...+50°C to 0...650°C ranges: < 0.15 %
- on 0...700°C to 0...800°C ranges: < 0.25 %

Ambient temperature effect
- on Zero: < 0.01 %/°C
- on Span: < 0.01 %/°C

Effect of sensor circuit wire resistance on output (equal change in all 3 wires): 0.15 %/Ω

Terminal voltage effect: < 0.002 %/V

Supply voltage ripple effect (3 V_{p-p}, 50-400 Hz, 24 V terminal voltage, 50 % input signal): No effect on output signal's DC level, alternating current component < 0.05 $\%_{p-p}$

Warm up drift (0-50°C range, 24 V DC terminal voltage, 100 % input signal): < 0.1 %

Long-term stability (23°C ambient temperature, 24 V terminal voltage, 50 % input signal): Change during 30 days < 0.1 %

Radiofrequency interference at 175 MHz and 444 MHz (0-50°C range, 24 V terminal voltage, 50 % input signal, 2 W antenna power, 0.5 m distance): < 3 %

Explosion protection: EEx ib IIC T6, PTB Nr.Ex-90.C.2160X

[1)] Errors given in per cent of span

Wiring

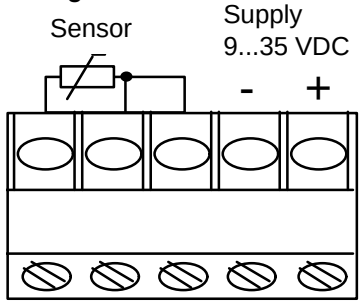

Construction
- Electronics cast in plastics
- Dimensions: diameter 44 mm, height 20 mm

Installation
- Fits a DIN 43729 B-type junction box (sensor head)
- Screw terminals provided with wire screen: max. cross-section 2.5 mm^2

Dimensions

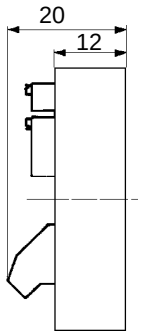

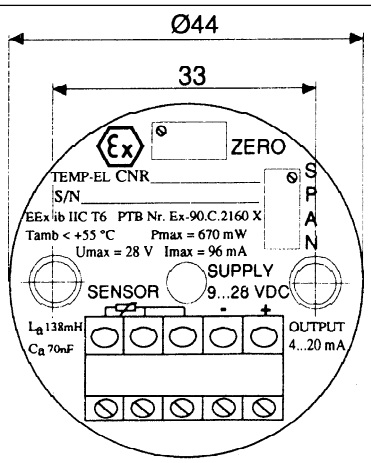

We reserve the right to make technical changes without prior notice.
Performance is indicated in accordance with IEC546 and IEC770 recommendations.

Satron Instruments Inc., P.O.Box 240, FIN-33201 Tampere, Finland
Tel. +358 3 387 1800, Telefax +358 3 387 1899, www.satron.com

TEMP-EL BNR

Temperature transmitter
mounted on terminal board

BT710
1990-05-15

TEMP-EL BNR is a Pt100 temperature transmitter mounted on AFTB1 and AFTB16 terminal boards.

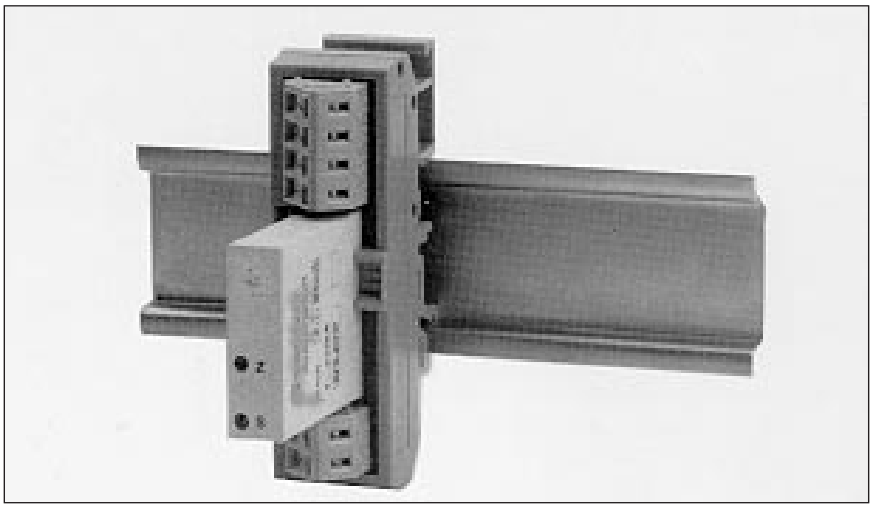

TECHNICAL SPECIFICATIONS

MEASURING RANGES:

Product Number	Range
• M899475	-50...+50°C
• M899476	0...50°C
• M899477	0...100°C
• M899478	0...150°C
• M899479	0...200°C
• M899480	0...250°C
• M899481	0...300°C
M899482	0...350°C
• M899483	0...400°C
M899484	0...450°C
• M899485	0...500°C
M899486	0...550°C
• M899487	0...600°C
M899488	0...650°C
M899489	0...700°C
M899490	0...750°C
• M899491	0...800°C
• Storage options	

Functional specifications

Output signal (linear relative to temperature): 4-20 mA

Output with break in Pt100 element (current limit): approx. 26 mA

Output with sensor circuit shorted at transducer terminals: < 3 mA

Permissible terminal voltage: 9-35 V DC

Sensor current: 2 mA

Permissible ambient temperature: -25 to +70°C

Sensor wiring: 3-wire system

Range adjusting limits (trimmers):
- Zero: ±5 %
- Span: ±5 %

Overvoltage capacity:
The transducer withstands a 1 MHz burst in accordance with IEC 255, 4 App. E across the signal conductors; (amplitude 500 V, repetition frequency 400 Hz, test duration 2 s).

Performance specifications [1)]

Measurement error relative to Pt100 sensor's table values (DIN 43760, terminal voltage 24 V, ambient temperature 23 °C, 3-wire system, wire resistance <0.2 Ω):
- on -50...+50 °C to 0...650 °C ranges: < 0.15 %
- on 0...700 °C to 0...800 °C ranges: < 0.25 %

Ambient temperature effect
- on Zero: < 0.01 %/°C
- on Span: < 0.01 %/°C

Effect on sensor circuit wire resistance on output (equal change in all 3 wires): 0.15 %/Ω

Terminal voltage effect: < 0.06 %

Supply voltage ripple effect (3 V_{p-p}, 50-400 Hz, 24 V terminal voltage, 50 % input signal): No effect on output signal's DC level, alternating current component < 0.05 $\%_{p-p}$

Warm up drift (0-50 °C range, 24 V DC terminal voltage, 100 % input signal): < 0.1 %

Long-term stability (23 °C ambient temperature, 24 V terminal voltage, 50 % input signal): change during 30 days < 0.1 %

Radiofrequency interference (20 V/m) at 175 MHz and 443 MHz (0-50 °C range, 24 V terminal voltage, 50 % input signal): < 3 %

[1)] Errors given in per cent of span.

Construction

- Electronics cast in plastics
- Dimensions: 36.4 x 33 x 10

Installation

- On AFTB1 or AFTB16 terminal board

Terminal board types
AFTB1: Terminal board for a single temperature transmitter; plug-in connections. The terminal board can be mounted on 15, 32 and 35 DIN46277 rails.
AFTB16: Terminal board for 1...16 temperature transmitters; 0.5...2.5 mm^2 screw terminals.

Dimensions

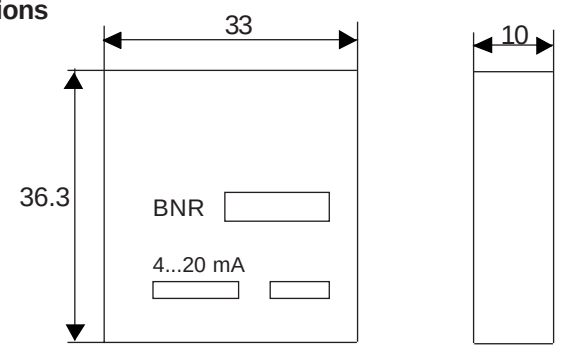

We reserve the right to make technical changes without prior notice.
Performance is indicated in accordance with IEC546 and IEC770 recommendations.

Satron Instruments Inc., P.O.Box 240, FIN-33201 Tampere, Finland
Tel. +358 3 387 1800, Telefax +358 3 387 1899

Connections

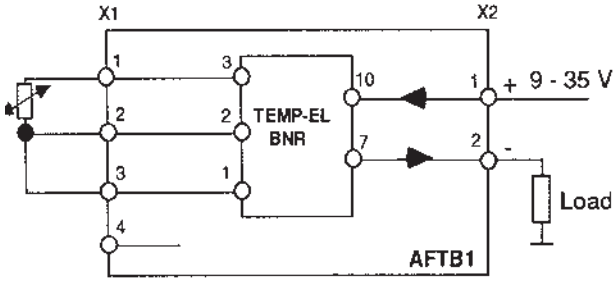

Jumpers have no effect.

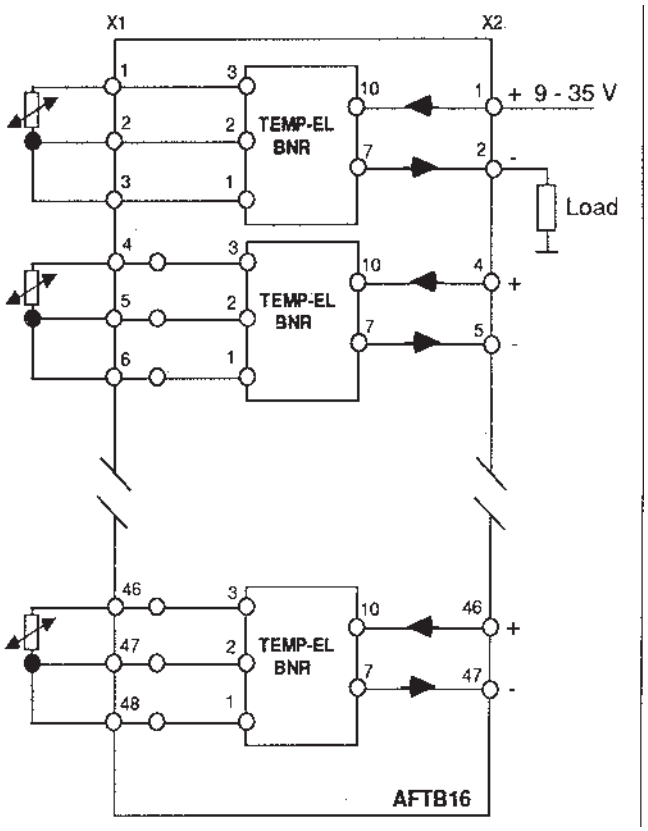

Dimensions

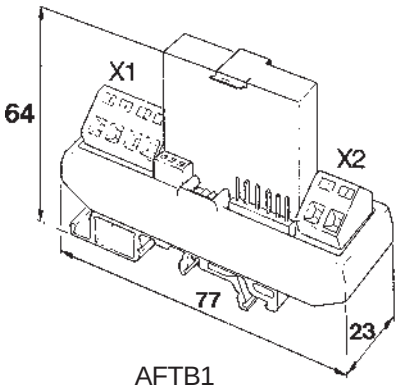

AFTB1

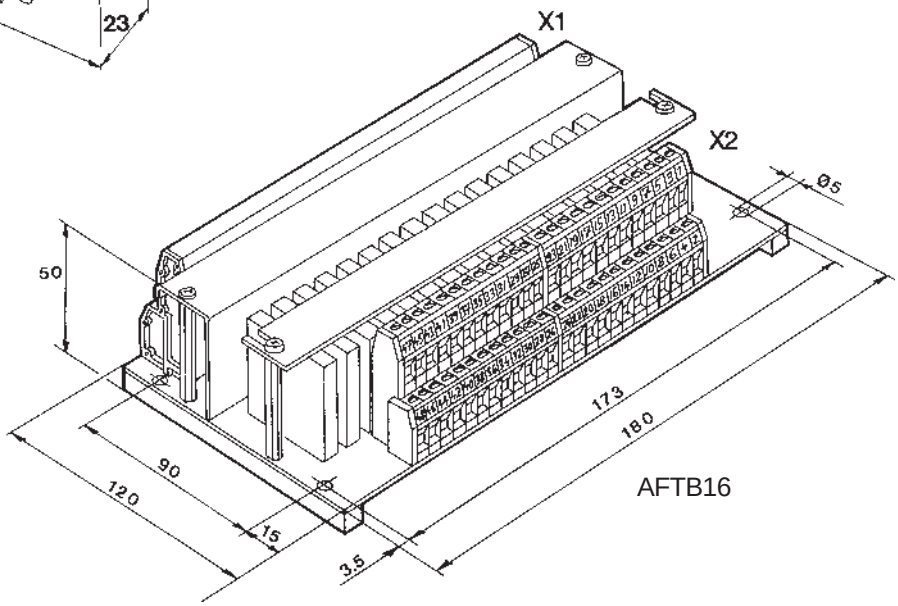

AFTB16

Density measurement

We manufacture the following instruments for density measurement:
- Electronic density transmitter DENS-EL ..... Spec. BD220

The following are also suitable for density measurement:
- HD differential pressure transmitter ..... Spec. BPdH750

Figure 1 shows the functional principle of the density transmitter. Density is measured by weighing the mass of a quantity of material flowing through a constant-volume element. This element consists of a U-tube (I) which at one end is pivoted and joined to the transmitter's body through flexible bellows(2). Separate counter-weights (3) are used to compensate for the force caused by the inherent mass of tube and liquid.
The changes in force caused by variations in liquid density are measured and converted to standard signal through the force-balance type transmitter mechanism (4).

Temperature compensation

Changes in liquid temperature will cause variations in liquid density. This density variation is normally non-linear. The temperature of the measured material also affects the volume and length of the U-tube through thermal expansion.
To eliminate these errors, the transmitters can be provided with a compensation device. The maximum value of temperature compensation for DENS-EL is 0.0022 kg/dm^3 °C.

The measured materials

In general, density measurement is used for determining the concentration of some constituent component in liquid material. The density of such component should differ from the common density of the other constituents, so that variations in its concentration will cause variations in overall density.
There are many typical applications in different industries, ranging from determination of fat content in cream to measurement of the concentration of sulphuric acid compound.
DENS-EL measures density continuously, with fast response to density variations; thus they are well suited for density control. The viscosity of the measured liquid should not exceed 10 Pa × s, and it should not contain such solids as might cause heavy sedimentation on the tube walls. The overall density should be between 0.5 kg/dm^3 and 3.0 kg/dm^3.
For the calibration of the transmitter the customer should specify all pertinent data concerning the process material; this is done on a questionnaire appended to the order.

Materials on contact with the measured liquid

PTFE bellows elements and borosilicate glass or Hastelloy-C measurement tube are available for heavily corrosive liquids. AISI 3I6L acid-resistant steel is used on the bellows and measurement tube for neutral and low-corrosion liquids.
For food industry applications the transmitters can be provided with easy-to-wash, hygienic, silicone-lined metal bellows (AISI 3I6L), or with shallow-fold PTFE bellows. A transmitter equipped with shallow-fold PTFE bellows elements can be calibrated for 0.I ... 0.5 kg/dm^3 range.
The DENS-EL Ex version is available for hazardous environments (intrinsically safe Ex i; ignition group G5).

Installation

The transmitter should be mounted on a solid steel or concrete base, on the vibration absorbers supplied with the transmitter. When required, a vibration absorber kit can be ordered for transmitters already in use. The transmitter body is provided with a water level that facilitates the levelling of the transmitter. Any tension or stress should be avoided in the installation. Ambient temperature should not exceed +60°C. The installation is described in more detail in the Operating and Installation Instructions.

Process connection

Maximum permissible flow is 120 litres/min for ∅ 32 mm measurement tube (AISI 3I6L), and 80 litres/min for ∅ 25 mm tube (glass or Hastelloy-C). If the flow rate of the process material is greater than that, the resulting increase in turbulence and in the forces of inertia generated in the U-tube may cause error and drift in the measurement. In such cases the transmitter can be connected to a by-pass line.
Maximum pressure for a transmitter with metal bellows is 10 bar (7 bar for the Ex i version). For the PTFE bellows, refer to the curve on the specification page.
Maximum temperature of process material is 110°C. When making the process connections, you should make sure that any vibration is prevented from resonating from the pipework to the transmitter. For this reason the pipework near the transmitter should be effectively supported, and the connection of process pipes to transmitter should be made through elastic connecting pipes to ensure the best possible measurement accuracy.

Figure 2 shows an example of valve locations. The pipework should always be provided with valves that permit the disconnection of the transmitter from the process for cleaning etc.
It is recommendable to use globe valves that correspond to the nominal pipe bore. The pipework should be directed upwards to prevent any accumulation of gas or sediment in the measurement tube.
The DENS-EL has been tested by SIREP-WIB (Evaluation report E2437 T82).

Figure 1

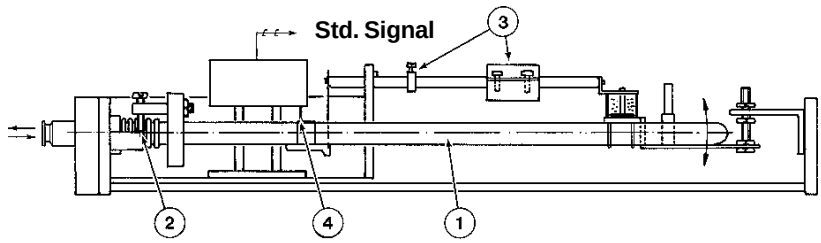

Figure 2

1) Measurement from main flow - by-pass valve
2) Measurement from by-pass flow - spring loaded non-return valve
3) Measurement from by-pass flow - orifice plate

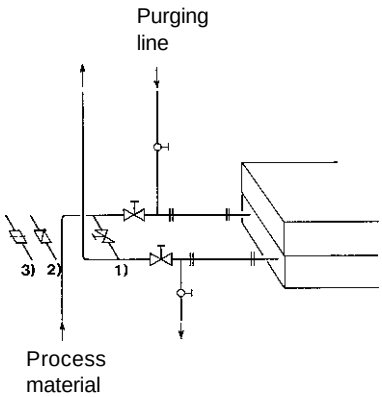

Satron Instruments Inc., P.O.Box 240, FIN-33201 Tampere, Finland
Tel. +358 3 387 1800, Telefax +358 3 387 1899

Selection table

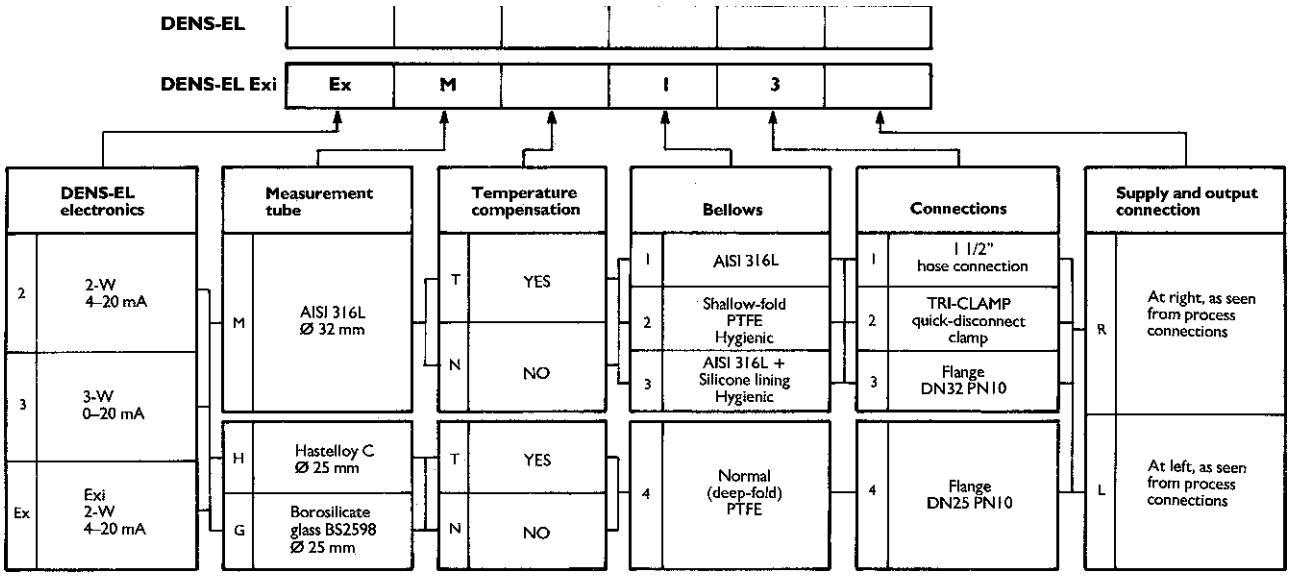

Specification example: DENS-EL 3GT44R

Figure 3

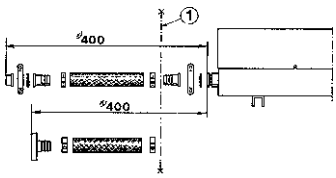

a) 1½" hose connection, welded coupling or DN32 PN10 flange coupling

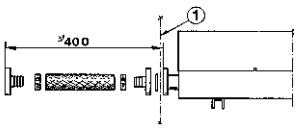

b) DN 32 PN10 flange coupling M548370

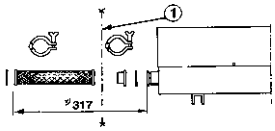

c) 3A-standard coupling; meets the sanitary requirements of food industry M547892

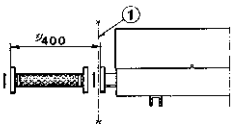

d) DN25 PN10 flange coupling for highly corrosive environments M548485

x = mounting length
① = fittings to be separately specified in the order (to the left of the line)

Figure 3 shows the different connection options corresponding to the selection table. Piping made of elastic material can be connected without extra connecting pipes.

Density measurement with differential pressure transmitter (Fig. 4)

Besides a density transmitter, a differential pressure transmitter can be used to measure liquid density in vertical piping. For this, the velocity of flow must not exceed 0.2 m/s. The measurement is based on the comparison of two columns of equal height: one of the process medium, the other of water. The connection can be made as shown in Fig. 4, or by using diaphragm seal units. The difference in height between the points of connection is approx. 4 meters. Temperature compensation is provided by mounting the water purging pipes in contact with the process pipe and by protecting the assembly with heat insulation.

Figure 4

1. Stud coupling, ∅ 12 mm/ R 1/2" male
2. 3-spindle mounting valve
3. Needle valve rotameter
4. Stud elbow, ∅ 12 mm/ R 1/4" male
5. T-piece ∅ 12 mm
6. Ball valve, R 1/2"
7. Pipe, 12×1 calibrated

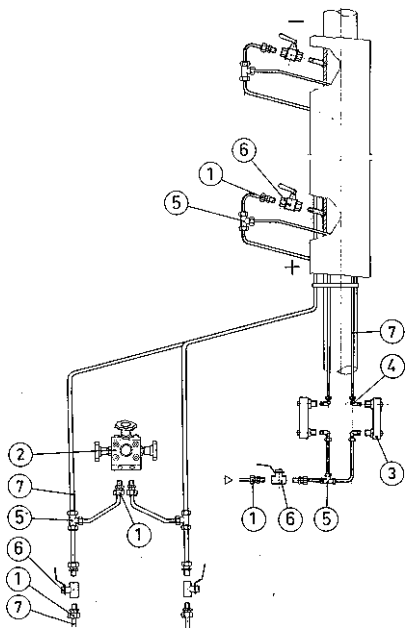

DENS-EL electronic density transmitter

BD220
March 15, 1989

The DENS-EL is an electronic density transmitter that operates on the force balance principle. Due to the small measurement lag it is highly applicable as a measurement transmitter in automatic density control.
When equipped with hygienic bellows, the transmitter meets also the requirements set by food industry for washability.

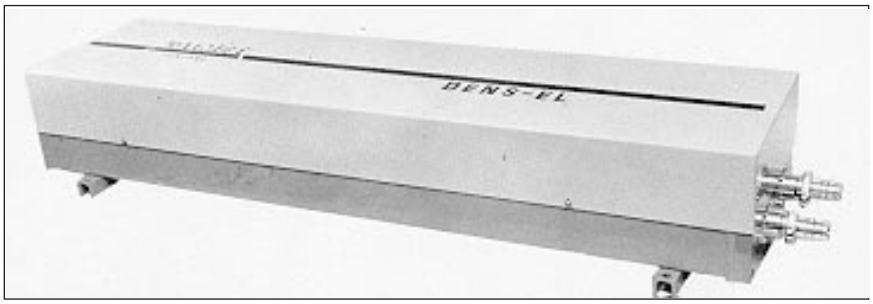

Technical specification

Span
- acid-resistant bellows: 0.025 to 0.5 kg/dm³
- normal PTFE bellows: 0.025 to 0.5 kg/dm³
- shallow-fold hygienic PTFE bellows: 0.1 to 0.5 kg/dm³
- silicone-lined bellows: 0.025 to 0.5 kg/dm³.

Lower range value: 0.5 to 2.5 kg/dm³.

Output signal
- 2-wire system and (Ex)i: 4 to 20 mA
- 3-wire system: 0 to 20 mA.

Supply voltage: 24 to 50 V DC.

Type Ex intrinsically safe (VDE 0171) (Ex) is G5 PTB Nr. 111 B/E-29 847 B output 4 to 20 mA. Valid only by the transmitters of metal tube type.

Permissible load
- 2-wire system
  - 24 V supply: 370 Ω
  - 48 V supply: 1400 Ω
- 3-wire system
  - 24 V supply: 500 Ω
  - 48 V supply: 1500 Ω

Application ranges
- density: 0.5 to 3.0 kg/dm³
- max. flow
  - AISI 316 tube, ∅32: approx. 120 l/min
  - glass tube, ∅25: approx. 80 l/min
  - HASTELLOY C tube, ∅25: approx. 80 l/min

For higher flows the transmitter is located in a by-pass line or a reflux branch.
- working pressure
  - acid-resistant bellows: 10 bar, Upon request 20 bar (static press. calib.)
  - silicone-lined bellows: 10 bar, Upon request 20 bar (static press. calib.)
  - The max. press. of hoses must be checked.
  - PTFE bellows: see curve
  - DENS-EL Ex i version: 7 bar
- resistance to pressure shocks
  - acid resistant bellows 25 bar
  - rubber lined bellows 25 bar
- max. temperature: 110°C
- max. viscosity: 10 Pa x s

Temperature compensation
Compensation may be adjusted for either linear or curved characteristic.
- max. width of compensation range (depending on the characteristics of the process fluid): Δt = 40 to 80°C
- max. permissible density change for 1 K temperature change in process fluid
  - with normal counterweight: 0.0011 kg/dm³
  - with double compensation weight: 0.0022 kg/dm³.

Max. ambient temperature: 60°C

Error, percent of span 1)	Min. span: 0.025 kg/dm³	Medium span: 0.250 kg/dm³	Max. span: 0.500 kg/dm³
- Non-linearity:	± 0.25 %	± 0.05 %	± 0.05 %
- Hysteresis:	0.20 %	0.05 %	0.05 %
- Sensitivity:	< 0.10%	< 0.10%	< 0.10%
- Repeatability:	0.15 %	0.04 %	0.04 %
- Effect of a 1 bar process pressure change on range zero between 0 and 10 bar	± 0.20 %	± 0.02 %	± 0.01 %
- Effect of supply voltage change: 0.05 %/10 V			

1) This does not apply to DENS-EL transmitters with shallow-fold PTFE bellows.

Mounting
In horizontal position on a firm, vibration-free base.

Process connections
In metal tube type (AISI 316), a 1 1/2" fitting for tubing, or a quick-disconnect fitting corresponding to 3-A standard or flange coupling DN32 PN40.
In glass tube and HASTELLOY C type, a DN25 PN40 flange connection.
DENS-EL Ex i version, DN32 PN40 flange connection.

Electrical connections
To terminal strip in junction box as shown in wiring diagram. Inlet through Pg 13.5 gland.

Materials
- measurement tube of acid-resistant steel, Pyrex glass, or HASTELLOY C
- bellows of acid-resistant steel, NBR-lined acid-resistant steel, or PTFE
- fittings of acid-resistant steel AISI 316
- body and case of steel with epoxy powder paint to prevent corrosion.

Calibration
The transmitter is factory-calibrated. The customer should supply the necessary data for calibration by filling in a questionnaire which is returned to the manufacturer as an appendix to the order.

Protection degree: IP 54

Weight: approx. 105 kg.

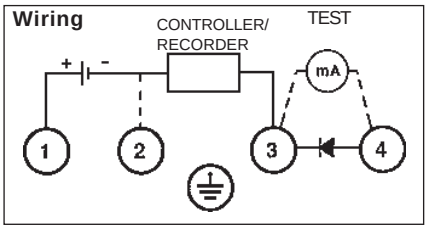

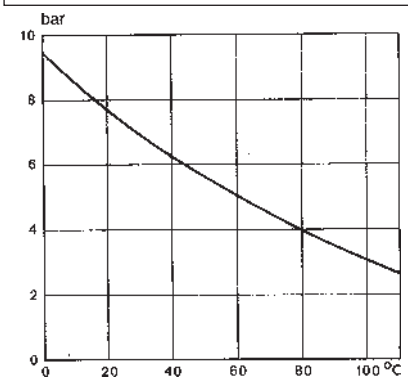

The pressure rating of the PTFE bellows of the glass tube type transmitter, as a function of temperature.

We reserve the right to make technical changes without prior notice. Performance is indicated in accordance with IEC546 and IEC770 recommendations.

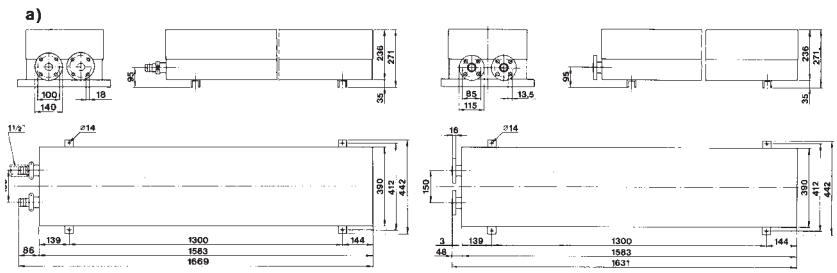

AISI 316 measurement tube ∅ 32
a) (Ex)i process connection

Glass and HASTELLOY C measurement tube ∅ 25

Satron Instruments Inc., P.O.Box 240, FIN-33201 Tampere, Finland
Tel. +358 3 387 1800, Telefax +358 3 387 1899

Controllers

CONTROLLERS

- **DAMATROL MC100**
  Digital Unit Controller ..... Spec. **CC850**
- **DAMATROL MC300**
  Three Position Controller..... Spec. **CC860**
- **DAMATROL MC512H**
  Multifunction Controller ..... Spec. **CC804E**

DAMATROL MC100

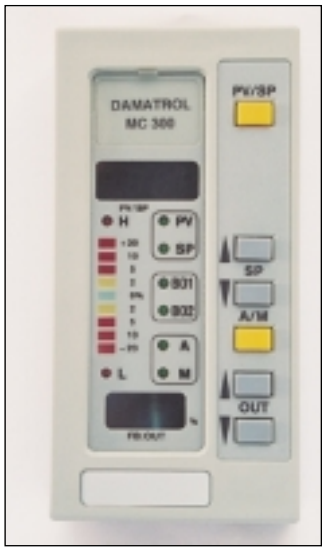

DAMATROL MC300

DAMATROL MC512H

Satron Instruments Inc., P.O.Box 240, FIN-33201 Tampere, Finland
Tel. +358 3 387 1800, Telefax +358 3 387 1899

DAMATROL MC100 Digital Unit Controller

CC850
July 15, 1993

DAMATROL MC100 is a digital single-loop unit controller which is used, for example, as PID controller, ratio controller or manual control station.

The controller's and process's operation is controlled and the control parameters are set through DAMATROL MC100's user interface.

The controller's I/O connections are made through a disconnectable I/O connector. The bus interface provided as a standard feature permits connection to a local control room or to higher-level systems, such as DAMATIC.

Technical specifications

Ambient requirements
- Operating temperature 0 to +50 °C
- Storage temperature -40 to +80 °C
- Relative humidity 0 to 80 %
- Vibration 1.3 mmpp, 5-14 Hz, 0.5 g, 14-150 Hz
- Mounting position Freely selectable.

Enclosure class
- Panel-mounting enclosure IP40

Dimensions
- Weight 1.7 kg
- Width x height x length 72 x 144 x 220 mm (without display unit)72 x 144 x 186 mm
- Mounting cut-out 68 x 138 mm (with mounting collar) 3" x 6" (US Std.)

Power supply
- Supply voltage
  230 V (-15 %...+10 %) 50/60 Hz
  115 V (-15 %...+10 %) 50/60 Hz
- Power consumption max. 8 W
- Power failure characteristics
  Data support in memory
  - All data: typically 24 h (e.g. setpoint and controller output)
- Parameters and calibration: 10 y.

I/O connections
- Analog inputs 2
- Analog outputs 1
- Binary inputs 2
- Binary outputs 2
- Transmitter supply connections 2
- Permissible wire cross-section max. 2.5 mm^2
- Field signal connection technique: Multiterminal screw-terminal block

Analog inputs
- Resolution 12 bit
- Accuracy 0.1 % F.S.
- Temperature error 0.06 % / 10 C F.S.
- Input resistance 250 Ω
- Attenuation 50 Hz/60 dB
- Grounding: Inputs have common ground potential
- Max. range 0...20.5 mA (freely selectable) (as voltage input) 0...5 V
- Max. voltage 30 V
- Filtering time constant 25 ms
- Impedance 250 Ω (as voltage input) 10 MΩ

Analog outputs
- Resolution 12 bit
- Accuracy 0.15 % F.S.
- Temperature error 0.1 % / 10 C F.S.
- Load capacity 800 Ω
- Max. range 0...20.5 mA (freely selectable)

Binary inputs
- Grounding: grounded input
- Switching device
  - Max. leakage current 2 mA
  - Min. current capacity 6 mA
  - Min. voltage capacity 28 V

Binary outputs
- Type: Reed relay, make-contact
- Voltage max. 30 V
- Current max. 100 mA
- Load power max. 3 VA
- Isolation voltage min. 1000 VAC
- Max. switch resistance 0.2 Ω
- Expected life 200 million switchings (10 mA, 10 VDC, resistive load)

Transmitter supply connections
- Current limitation 25 mA
- Mains voltage 230/115 VAC 24 V (+10...-15%)

Grounding
- Analog inputs and outputs: Common ground potential
- Binary inputs and outputs: Common ground potential
- Analog and binary ground: Connected together inside controller
- Guard wire connections 2 grounding screws (protective earth and sheaths of cables)

Buses
- Interfaces RS-232, RS-485
- Max. cable length 1200 m (RS-485), 15 m (RS-232)
- Baud rate 600...38400 baud
- Protocol: Modbus RTU (slave), DBUS (multidrop bus)
- Max. number of controllers per bus 32 (Modbus) or 15 (DBUS)

Control panel
- Digital displays 4- and 3-digit green 7-segment displays for measured process value, setpoint and controller output.
- LEDs 2 reds for alarm limits; 3 x 2 greens for indicating the PV/SP, L/R and A/M states; 9-LED green/ yellow/red control deviation display
- Display brightness Adjustable (15 steps)
- Keypad 7 pushbutton keys

SATRON instruments
Satron Instruments Inc., P.O.Box 240, FIN-33201 Tampere, Finland
Tel. +358 3 387 1800, Telefax +358 3 387 1899

DAMATROL MC100 Digital Unit Controller

DIMENSIONS

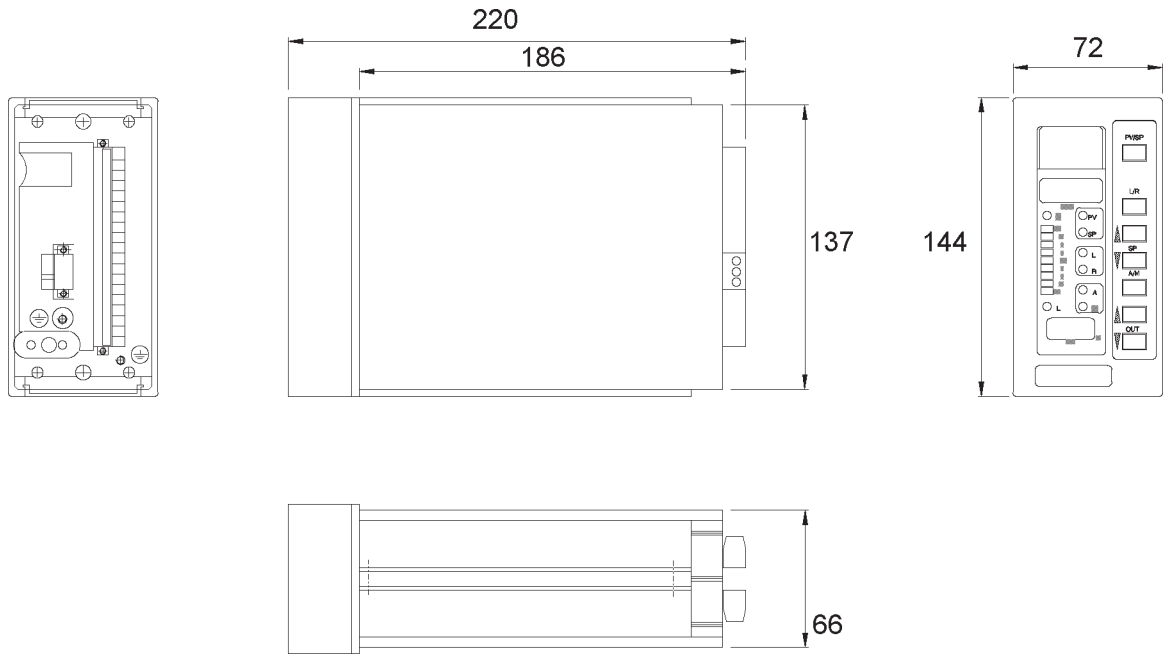

Software

- Computing time 100 ms
- External precision of numbers 16 bit, Internal precision of numbers 24...40 bit
- PID controller
  - KP (gain) 0.125 ... 24.0
  - TI (integral action time) 1.1 s ... infinite
  - TD (derivative action time) 0 ... 153.6 s
- Measured value and setpoint scale: High and low limit selectable -999 ... +9999.
- Measured value handling: Filtering, linearization, square root extraction, high and low limit alarms.
- Remote setpoint handling:Filtering, ratio, bias, high and low limits.
- Output handling: Filtering, interlocking, forced manual control, high and low limits.

CE

MEETS THE COUNCIL OF THE EUROPEAN UNION DIRECTIVES 73/23/EEC FOR ELECTRICAL EQUIPMENT DESIGNED FOR USE WITHIN CERTAIN VOLTAGE LIMITS AND AMENDMENT 93/68/EEC AND 89/336/EEC FOR ELECTROMAGNETIC COMPATIBILITY REQUIREMENTS.

CONNECTIONS

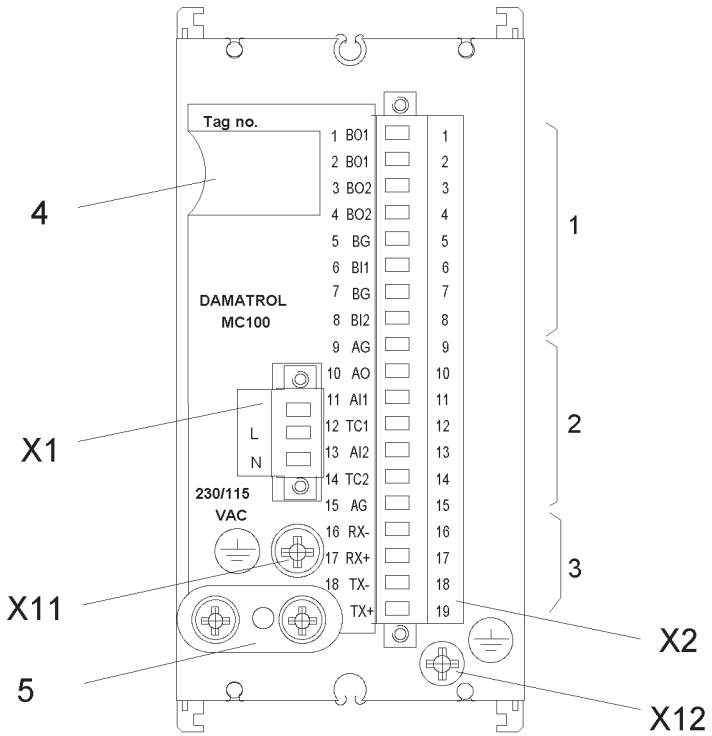

X1	Mains power connector	1	Binary I/Os
X2	I/O connector	2	Analog I/Os
X11	Housing grounding screw	3	RS-485 interface
		4	Tag number pocket
X12	Grounding screw	5	Cable clamp

DAMATROL MC300 Three position controller

CC860
April 15, 1997

Damatrol MC300 is a digital single-loop controller which is used as positioner or three position controller.

The positioner drives an actuator through binary outputs on the basis of the difference between the PID controller's output and the actuator's position. Three position control operates in the same way as the positioner, except that control is carried out on the basis of the difference between the controller's measured value and setpoint. The controller takes also into account the drive time of the actuator.

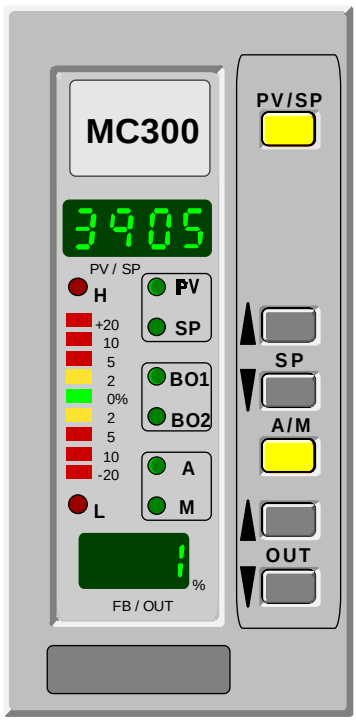

Technical specifications

Ambient requirements
- Operating temperature 0 to +50 °C
- Storage temperature -40 to +80 °C
- Relative humidity 0 to 80 %
- Vibration 1.3 mmpp, 5-14 Hz, 0.5 g, 14-150 Hz
- Mounting position Freely selectable.

Enclosure class
- Panel-mounting enclosure IP40, display as option IP54
- Field enclosure IP65

Dimensions
- Weight 1.7 kg
- Width x height x length 72 x 144 x 220 mm (without display unit)72 x 144 x 186 mm
- Mounting cut-out 68 x 138 mm (with mounting collar) 3" x 6" (US Std.)

Power supply
- Supply voltage 230 V (-15 % .. +10 %) 50/60 Hz 115 V (-15 % .. +10 %) 50/60 Hz
- Power consumption max. 8 W
- Power failure characteristics Data support in memory
  - All data: typically 24 h (e.g. setpoint and controller output)
- Parameters and calibration: 10 y.

I/O connections
- Analog inputs 2
- Analog outputs 1
- Binary inputs 2
- Binary outputs 2
- Transmitter supply connections 2
- Permissible wire cross-section max. 2.5 mm²
- Field signal connection technique: Multiterminal screw-terminal block

Analog inputs
- Resolution 12 bit
- Accuracy 0.1 % F.S.
- Temperature error 0.06 % /10°C F.S.
- Input resistance 250 Ω
- Attenuation 50 Hz/60 dB
- Grounding: Inputs have common ground potential
- Max. range 0 .. 20.5 mA (freely selectable) (as voltage input) 0 .. 5 V
- Max. voltage 30 V
- Filtering time constant 25 ms
- Impedance 250 Ω (as voltage input) 10 MΩ

Analog output
- Resolution 12 bit
- Accuracy 0.15 % F.S.
- Temperature error 0.1 % /10°C F.S.
- Load capacity 800 Ω
- Max. range 0 .. 20.5 mA (freely selectable)

Binary inputs
- Grounding: grounded input
- Switching device
  - Max. leakage current 2 mA
  - Min. current capacity 6 mA
  - Min. voltage capacity 28 V

Binary outputs
- Type: Solid state relay, make-contact
- Voltage max. 30 V
- Current max. 100 mA
- Load power max. 3 VA
- Isolation voltage min. 1000 VAC
- Max. switch resistance 5 Ω

Transmitter supply connections
- Current limitation 25 mA
- Mains voltage 230/115 VAC 24 V (+10 .. -15%)

Grounding
- Analog inputs and outputs: Common ground potential
- Binary inputs and outputs: Common ground potential
- Analog and binary ground: Connected together inside controller
- Guard wire connections 2 grounding screws (protective earth and sheaths of cables)

DAMATROL MC300

☐ ☐ ☐ ☐ ☐ ☐

Casing
P = Panel
FO = Field IP65, operation IP40
FC = Field IP65, operation IP65

Assempling for operator terminal
4 = IP40
5 = IP54

Input signal type
N = 4...20 mA
1 = 0...20 mA
2 = 1...5 V
3 = 0...5 V
S = Special
P = Pressure input 0.2...1.0 bar (P/I converter mounted)

Feedback signal type
N = 4...20 mA
1 = 0...20 mA
2 = 1...5 V
3 = 0...5 V
S = Special

Power supply
1 = 230 VAC 50/60 Hz
2 = 115 VAC 50/60 Hz

Configuration
0 = Standard
1 = Customer specific

SATRON instruments

Satron Instruments Inc., P.O.Box 240, FIN-33201 Tampere, Finland
Tel. +358 3 387 1800, Telefax +358 3 387 1899

DAMATROL MC300 Three position controller

DIMENSIONS

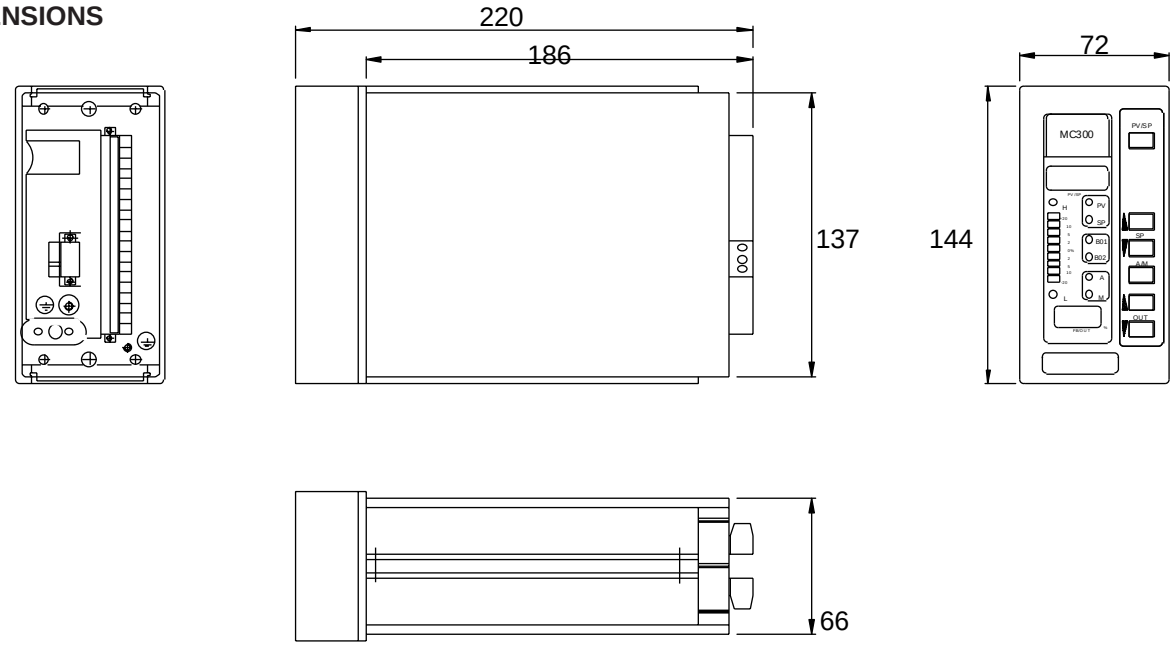

Buses

- Interfaces RS-232, RS-485
- Max. cable length 1200 m (RS-485), 15 m (RS-232)
- Baud rate 600 .. 38400 baud
- Protocol:
  Modbus RTU (slave),
  DBUS (multidrop bus)
- Max. number of controllers per bus
  32 (Modbus) or 15 (DBUS)

Control panel

- Digital displays 4- and 3-digit green 7-segment displays for measured process value, setpoint and controller output.
- LEDs
  2 reds for alarm limits;
  3 x 2 greens for indicating the PV/SP, B01/B02 and A/M states;
  9-LED green/yellow/red control deviation display
- Display brightness adjustable (15 steps)
- Keypad 6 pushbutton keys

Software

- Computing time 100 ms
- PID controller
  - KP (gain) 0.125 ... 24.0
  - TI (integral action time)1.1 s ..1370,infinite
  - TD (derivative action time) 0 ... 1536 s
- Measured value and setpoint scale:
  High and low limit selectable
  -999 ... +9999.
- Measured value handling: Filtering, linearization, square root extraction, high and low limit alarms.
- Three point control:
  start thres 0.0...100.0%
  dead time 0...999.9 s
  drive time of the valve 0...999.9 s

CONNECTIONS

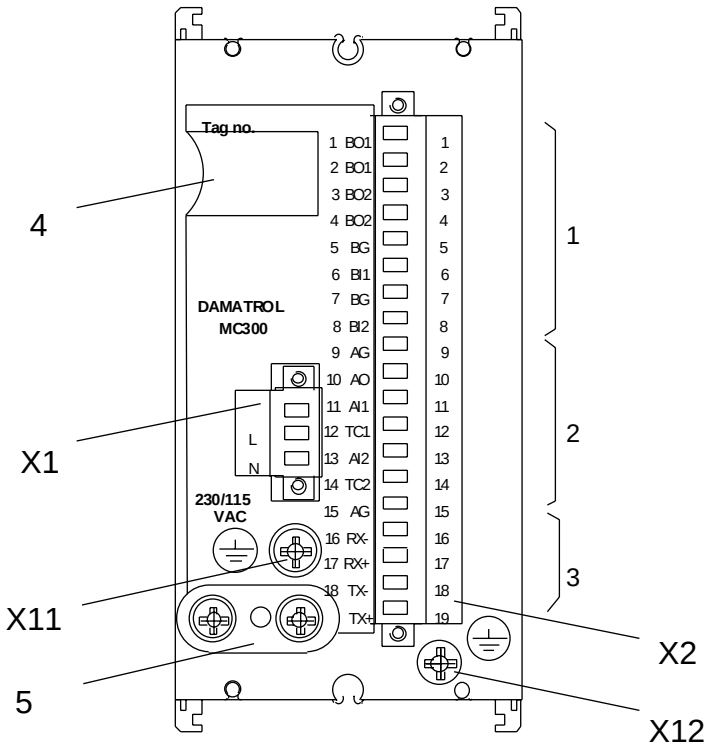

X1	Mains power connector	1	Binary I/Os
X2	I/O connector	2	Analog I/Os
X11	Housing grounding screw	3	RS-485 interface
		4	Tag number pocket
X12	Grounding screw	5	Cable clamp

CE

MEETS THE COUNCIL OF THE EUROPEAN UNION DIRECTIVES 73/23/EEC FOR ELECTRICAL EQUIPMENT DESIGNED FOR USE WITHIN CERTAIN VOLTAGE LIMITS AND AMENDMENT 93/68/EEC AND 89/336/EEC FOR ELECTROMAGNETIC COMPATIBILITY REQUIREMENTS.

DAMATROL MC512 H multifunction controller

DAMATROL MC512 H is a digital multifunction controller which permits all basic controller configurations such as PID, cascade and ratio control.

DAMATROL MC512 H can be configured either through its Panel Board with pre-programmed standard options, or with a PC and software using functional blocks.

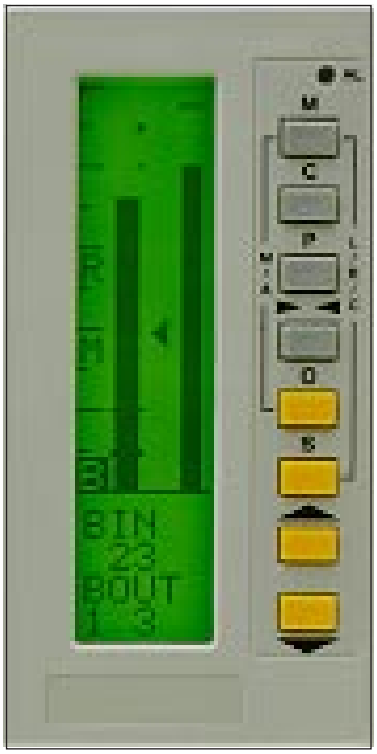

DAMATROL MC512 H XXXX

Enclosure versions
E = Panel
F = Field
R = 19" rack

Supply voltage
1 = 230 V AC, +24 V DC
2 = 115 V AC, +24 V DC

Software
N = fixed conf. C1
P = PC conf.

Bus
C = no
L = yes

Code example:
DAMATROL MC512 H E 1 P L

DOCUMENTS
- CC804TEC for C1 fixed conf.
- CC804M, conf. sheet for C1
- CC804PCTEC for PC conf.

TECHNICAL SPECIFICATIONS

Ambient requirements
- operating temperature: 0 to +50 °C
- storage temperature: -40 to +80 °C
- relative humidity: max. 80 %
- vibration: max. 1.3 mmpp, 5-14 Hz, 0.5 g, 14-150 Hz

Enclosure class
- panel-type enclosure: front IP40, rear IP40
- field-type enclosure: IP65

Dimensions
Panel-type enclosure
- weight: approx. 2.7 kg
- outside dimensions:
-- width: 72 mm
-- height: 144 mm
-- length: 430 mm (without display unit: 395 mm)
- panel cut-out: 68 x 138 mm
-- with mounting collar: 3" x 6" (US std.)

Field-type enclosure
- weight: approx. 3 kg (one controller)
- outside dimensions
-- width: 310 mm
-- height: 192 mm
-- depth: 270 mm

Power supply
- 230 V (-15 %...+10 %) 50/60 Hz
- 115 V (-15 %...+10 %) 50/60 Hz
- 20...40 V DC
- power consumption: max. 20 W

Power failure features
Preservation of data in memory
- all data: 24 h (e.g. signal values, trends)
- parameters, calibration and configuration: 10 years

Running mode after power failure is selectable by the user.

Analog connections
- common ground potential for analog inputs and outputs
- calibration through 0-20 mA (0-5 V) range; min. span 2 mA; standard calibration 4-20 mA
- resolution: 12 bits
- accuracy: ±0.1 % of standard span

4 analog inputs
- current input impedance: 250 Ω
- voltage input impedance: 0.5 MΩ

2 analog outputs

Hart connection
Front-access port for transmitters that communicate via HART, Highway Addressable Remote Transducer, protocol

4 binary inputs
- common ground potential for binary inputs
- input impedance: 10 MΩ
- input signal: make-contact 24 VDC

4 binary outputs
- relay outputs
  - voltage max. 30 V
  - current max. 200 mA
  (max. values for resistive load)
- voltage free contact

4 transmitter supplies
- min. 24 V, 20 mA, short-circuit protected
- current limit: 24 mA

Configuration

Fixed configuration (C1)
- 3 controller loops
- 6 measurement and calculation loops (counters, min, max, +, -, x, /, √, lin etc.)
- 4 binary logic loops (AND, OR, XOR)
- displays: 3 controller, 2 measurement, 1 four-column and 21 trends
- back up

PC configuration
- 80 different functional blocks
- 255 functional blocks per application
-16 displays, 8 different types plus text and motor control display
- sequence of display pages/types is selectable
- back up

Buses
- internal bus: up to 15 Damatrol MC512 controllers
- PC bus: up to 15 Damatrol MC512 controllers; 1-4 buses/PC
- RS485 hardware
- Modicon Modbus RTU software
- baud rate: selectable, max. 38 kB

SATRON instruments
Satron Instruments Inc., P.O.Box 240, FIN-33201 Tampere, Finland
Tel. +358 3 387 1800, Telefax +358 3 387 1899

I/O Expansion units

for DAMATROL MC512 H

1993-05-31

I/O expansion units are used to increase the number of standard DAMATROL controller's I/O connections. With expansion units the controller's standard I/O is multiplexed to max. four expansion I/Os. If required, several expansion units can be connected to a single controller. Up to 7 units can be connected to provide a maximum of 16 analog inputs, 8 analog outputs, 16 binary inputs and 8 binary outputs. The update interval of the I/Os will then be increased from the normal 100 ms to 400 ms. All I/O expansion units use external 24 VDC (-10% +20%) supply.

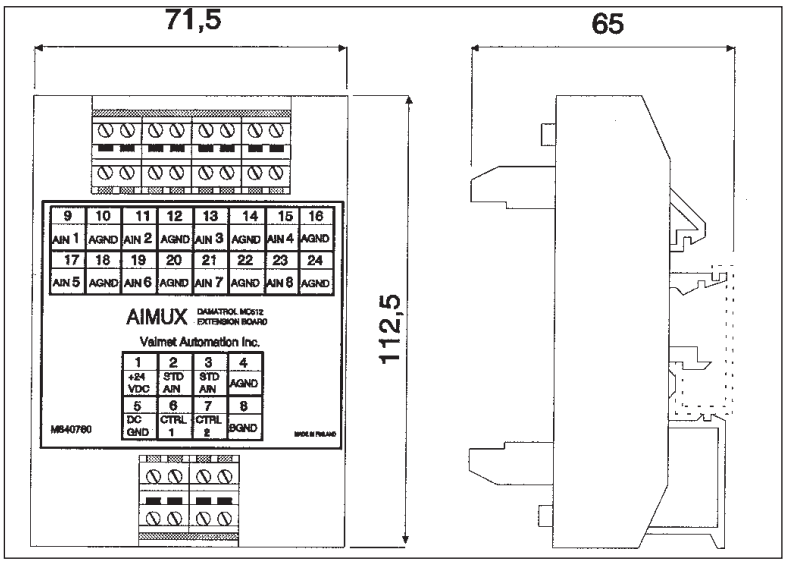

TECHNICAL SPECIFICATIONS

Construction
- Plastic base with terminal-block connections
- Metal cover

Operating temperature
- 0 to 50°C

Enclosure class: IP30

Installation
- On mounting rail TS35 DIN46277, BL1, 2 or 3.
- Recommended maximum distance from DAMATROL less than 5 m

Control
- DAMATROL's standard outputs BOUT3 and BOUT4 are used for control

NOTE!
Expansion units can only be used with DAMATROL MC512 H PC version.

Features

AIMUX
- Input resistance: 272R ±2 %
- Resolution: 12 bit
- Channel-specific calibration
- Accuracy for calibrated channel: ±0.15 % F.S.
- Difference between channels connected to same input: max. 0.5 %
- Thermal drift: ±0.05%/10°C F.S. (not including DAMATROL)
- Current consumption: max. 75 mA, not including AIN signal currents

AOMUX
- Resolution: 12 bit
- Channel-specific calibration
- Accuracy for calibrated channel: ±0.15 % F.S.
- Difference between channels connected to same output: max. 1.5 %
- Thermal drift: ±0.05%/10°C F.S. (not including DAMATROL)
- Current consumption: 50 mA

BIMUX
- Binary inputs are grounded and electrically isolated from analog signals
- Switch's leakage current can be max. 1 mA, minimum voltage capacity 30 V, and minimum current capacity 15 mA
- Unconnected input is read as zero
- Current consumption: max. 100 mA

BOMUX
- Relay's normally-open contact as output
- Open contact corresponds to the "0" state
- Without power supply the state of the outputs is "0"
- In undervoltage conditions, or when DAMATROL control is off, the outputs will go to "0" state after approx. 1.6 s

Performance specifications for resistive load:
- Maximum current: 100 mA
- Maximum voltage: 30 V
- Insulation voltage: 1000 VAC RMS
- Switch resistance: max. 0.2 Ω
- Current consumption: 200 mA

RECORDERS

- **DIGIREC A/B**
  Pen and Multipoint Recorder ..... Spec. **CR300**
- **DIGIREC C/D**
  Digital Recorder ..... Spec. **CR320**

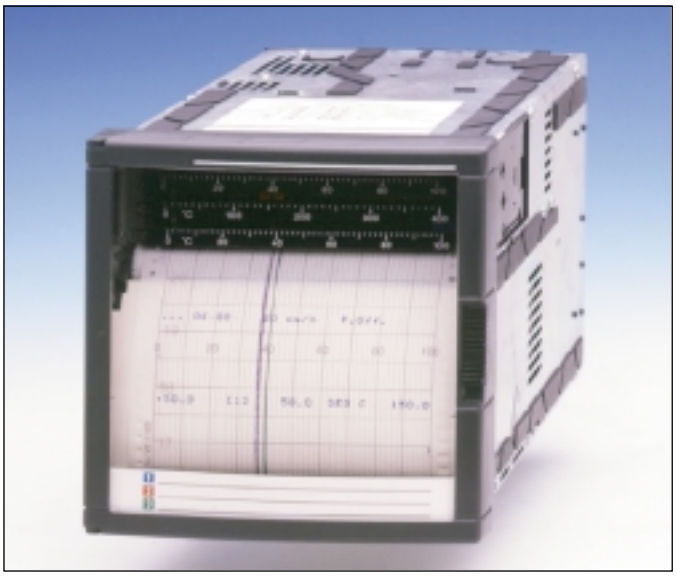

Satron Instruments Inc., P.O.Box 240, FIN-33201 Tampere, Finland
Tel. +358 3 387 1800, Telefax +358 3 387 1899

DIGIREC A/B Pen and Multipoint Recorder

CR300
Jan. 15, 1998

The DIGIREC A and B are the low cost, high functionality 100 mm chart-width microprocessor-based recorders which has been designed for general purpose applications worldwide. Its design meets the requirements of quality, ruggedness, flexibility, ease of use and optimum price/functionality combination.

The two versions are:
· DIGIREC A: a 1 to 3 continuous pen recorder;
· DIGIREC B: a 1 to 6 channel multipoint recorder.

These recorders has been designed for applications in the metal, glass, ceramics and utilities industries, as well as for the new and fast growing markets related to:
· environmental monitoring
· health and sanitation
· food processing
· pilot plants and laboratories

MAIN FEATURERS

- Microprocessor-based
- 1, 2 or 3 pens, or 1 to 6 channels multipoint
- 100 mm chart-width (DIN 16230)
- 0.25% accuracy full-scale (IEC 873)
- Analogue displays with a wide selection of ranges and scales
- Fully configurable universal inputs (T/C, RTD, High level)
- Roll or fan fold chart paper
- Chart documented with date, time, range, engineering unit, chart speed, identification number, alarm setpoints and events
- Up to 6 alarm relay outputs (Pen: 2 alarm set-points per pen, Mpt: 1 alarm set-point per channel)
- Up to 2 optional logic inputs for event recording, print inhibit and change speed
- Non-volatile memory
- 2 configurable chart speeds (Pen: 10 to 6000 mm/h; Mpt: 10 to 1500 mm/h)
- Simplified product configuration with prompts printed on the chart
- Full product configuration by PC software connected by a front jack connector
- Product calibration to certify input sensor: zero, span adjustments per channel
- Universal power supply: 85 to 264 VAC 50/60 Hz, 24 or 48 VAC/DC
- Permanent operation up to 50°C (120°F)

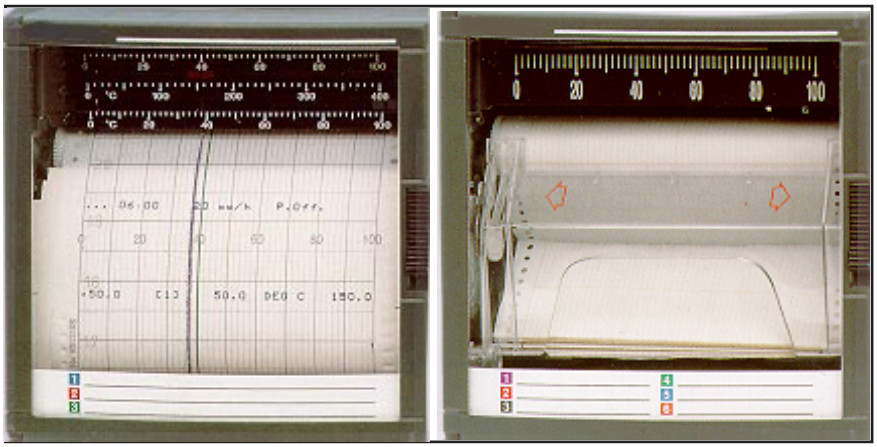

- Rugged construction for industrial applications
- IP 54 front protection (IEC 529)
- Compact dimensions: 144 x 144 mm (DIN 43700/43718), depth 245 mm (9.7") behind panel

OPTIONS

- Illuminated chart
- Key lock
- Rear terminal cover
- 24 VDC 75 mA max. to supply 3 transmitters
- Operating temperature up to 60°C (140°F)
- Pen offset compensation
- 2 logic inputs
- 2, or 6 alarms output
- Portable unit
- Abrasion-resistant plastic window

FUNCTIONAL SPECIFICATIONS

Technical data

Analogue inputs

DIGIREC A pen recorder
1, 2 or 3 continuous traces. Pen 1 also prints all chart documentation.

DIGIREC B multipoint recorder
1 up to 6 channels. Inputs are scanned by relays, galvanically isolated and individually configurable to any listed actuation.

Signal source
Thermocouple with individual cold junction compensation.
Line resistance up to 1000 ohms T/C, mV, mA, Volt
RTD Pt 100 3-wire connections, lead resistance per wire 40 Ω balanced.

Field calibration
A channel field calibration 0 % and 100 % span, may be made to certify input sensor loop.

Burnout
T/C, mV, Volt; factory set fo upscale (configurable to downscale or none)
RTD: inherent upscale.
mA: inherent downscale

Scanning time

Pen:

Chart Speed	Inputs mV,V,mA	Inputs T/C, RTD
at 10-60 mm/h	330 ms	2 sec
at 60-300 mm/h	330 ms	1 sec
at > 300 mm/h	330 ms	330 ms

Mpt: 5 seconds for 6 channels.

Input impedance
10 Mohm for T/C, mV inputs.
>1 Mohm for volt inputs

Stray rejection
Series mode ≥ 60 db.
Common mode at 250 VAC ≥ 130 db

Logic inputs (option)
Up to 2-dry contact inputs (1.5 mA - 12 VDC).

Actions
Change chart speed 1 to speed 2.
Print inhibit.
Event marking:
Pen: Pen 1 used as operation marker on the right side of the chart.
Multipoint: 2 traces maximum on the right side of the chart. (L_1 = purple, L_2 = red).

Scales

Pen
1 analogue scale per pen in accordance with the input range configuration.
Multipoint
1 analogue scale, 0 to 100 linear.

SATRON instruments
Satron Instruments Inc., P.O.Box 240, FIN-33201 Tampere, Finland
Tel. +358 3 387 1800, Telefax +358 3 387 1899

DIGIREC A/B Pen and Multipoint Recorder

Recording span

Scaling
Per input, an analogue scale is printed on the chart with the engineering unit. Each input can be configured differently.
Pen offset
Distance between pen: 2 mm.
Chart definition: 1 step = 0.2 mm.

Pen carriage speed
1 second full scale

Chart length
Fan fold 18 m. (as DIN 16230)
Roll 24 m

Pen trace
Pen
1400 m per pen
Multipoint
250 m per colour

Chart speed
1 or 2 chart speeds, fully configurable, selected by a logic input.
Speed 1: fully adjustable per step of 1 mm/h, within limit
Speed 2: choice as per the model selection guide.

Speed setting
Pen: 10 to 6000 mm/h (.5 to 240"/h).
Mpt: 10 to 1500 mm/h (.5 to 60"/h).

Stepping chart motor
Resolution 0.12 mm.

Alarms (option)
Pen 1,2,3 or Mpt 3 CH
2 alarm set-points per channel, (factory set* 1 low, 1 high).
Mpt (6 CH)
1 alarm set-point per channel, (factory set* high).
Hysteresis
0.5% to 99% of Scale (Factory Set at 0.5%).
Outputs
Up to 6 alarm relays output contacts.
1 SPST normally closed contact (may be configured into normally open contact).
Rating contact
2 A, 250 VAC on resistive loads.
* other selections configured by PC

Power supply
85 to 264 VAC, 50/60 Hz or 24 or 48 VAC/DC (+10 -15% nominal)
To transmitters
24 VDC, 50 mA max (optional).
Power consumption
3 pens: 30 VA max.
Multipoint : 30 VA max.

Clock timer
Format
Year, month, hour, minute can be set.
Power interruption
Battery back-up time of 10 years with 3 years off power.
Accuracy
$\pm 10^{-5}$

Packaging

Weight
Pen: 3.5 kg
Multipoint: 3.5 kg
Front face
144 x 144 mm according to DIN 43718
Depth
245 mm /9.7" behind panel, including terminals and line protection cover
Front window Acrylic
Front protection IP 54 (IEC 529)
Lock
Latch or key (DIN 43832-N)
Cut out DIN 138 x 138 mm.
Construction Silicon-free
Optional
Chart illumination.
Rear terminal cover.

Mounting
Panel mounting ±30° from horizontal (DIN 43834).

Wiring
Rear screw terminals.
Terminal modules are plugged on the instrument

Writing

Pen
1 cartridge per pen, fibre tip,1400 m of trace per colour (blue, red, green)
Multipoint
1 print wheel, 6 colours, 250 m of trace per colour (purple, red, black, green, blue, brown)

Noise immunity
Meets or exceeds:
IEC 801-2: electrostatic discharge: meets level 3
IEC 801-3: radiated electrostatic field: meets level 3
IEC 801-4: electrical fast transcients: meets level 3
IEC 801-5: line voltage surge: meets level 3
VDE 871 radio EMI interference (EN55022 class B): meets level B

Safety protection
Complies with 414, 348 and 1010-1 installation category 2 for personal protection
Designed to meet UL and CSA C22.2, N142 standard (CSA approved)

Electrical insulation
Input to input
Test votage 350 VAC for 1 min (except for RTD input) or 280 VAC with option State Relay.
Input to ground
Test voltage 1.5 kVAC for 1 min.
Input to line voltage
Test voltage 2.3 kVAC for 1 min.
Line voltage to ground
Test voltage 2.3 kVAC for 1 min.
Alarm relay to ground
Test voltage 2.3 kVAC for 1 min.
Logic input to ground
Test voltage 350 VAC for 1 min.

Temperature

Ambient
0 to 50°C (32 to 120°F)
Optionally 0 to 60°C (32 to 140°F)
Storage
-40 to +70°C (0 to +160°F)
10 to 90 % RH non condensing

Humidity

Roll 10 to 90% RH non-condensing
Fan-fold
15 to 80% RH non-condensing

Vibrations
Frequency
10 to 60 Hz - Amplitude 0.07 mm
60 to 150 Hz - Acceleration 1 g

Accuracy

Reference conditions

Temperature
20°C ±2°C (68°F ± 3°F)
Humidity 65% RH ± 5% RH
Line voltage nominal ±1%
Source resistance 0 Ω
Series mode 0 V
Common mode 0 V
Frequency nominal ±1 %

Accuracy
0.25% of total range (IEC 873).

Extreme conditions

Operating

Temperature
0 to +60 °C (0 to 140 °F).

Humidity
10 to 90 % RH non-condensing.

Storage

Temperature
-40 to +70 °C (-40 to 160 °F).

Humidity
5 to 95 % RH non-condensing.

Rated limits and associated drifts		
Parameter	**Rated limits**	**Influence on accuracy**
Temperature	0 to 50°C (32 to 120°F)	0.1 % per 10°C Cold junction 0.3°C/10°C
Supply voltage	85 to 264 V	No influence
Source resistance	T/C, mV	6µV per 100 Ω of line resistance 1000 Ω max
	RTD	0.1 °C per Ω in each wire balanced leads, 40 Ω max.
Humidity	10 to 90% RH at 25°C	0.1 % max.
Long-term stability		0.1 % per year
Vibrations	2.5 mm at 0 to 14 Hz 1 g at 14 to 250 Hz	

Available ranges

Thermocouples		°C	°F
	J	-50 to +150	-100, 0, 300
		0 to 400	0 to 800
		0 to 800	0 to 1500
	K	0 to 400	0 to 800
		0 to 800	0 to 1500
		0 to 1200	0 to 2400
		0 to 1400	0 to 2500
	Nicrosil-Nisil (N)	0 to 400	0 to 800
		0 to 800	0 to 1500
		0 to 1200	0 to 2400
		0 to 1400	0 to 2500
	S	0 to 1600	0 to 3000
	R	0 to 1600	0 to 3000
	T	-100 to +200	-150 to +400
		0 to 150	0 to 300
		50 to 150	100 to 300
	Note: (Provision to accept T/C input for remote compensation box at fixed temperature of 50°C or 60°C).		
RTD's		°C	°F
	Pt 100	-50 to + 50°C	-60 to +140° F
		-50 to +150	100, 0, +300
	(Alpha = 0.00385)	0 to 100	0 to 200
		-200 to +200	-300 to +400
		0 to 400	0 to 800
mV and Volt	0 to 10 mV	0 to 1 V	
	0 to 20 mV	0 to 5 V	
	0 to 50 mV	1 to 5 V	
	10 to 50 mV	0 to 10 V	
	0 to 100 mV		
mA	0 to 20 mA or 4 to 20 mA linear 4 to 20 mA SQRT input resistor 250 ohms required		

Dimensions

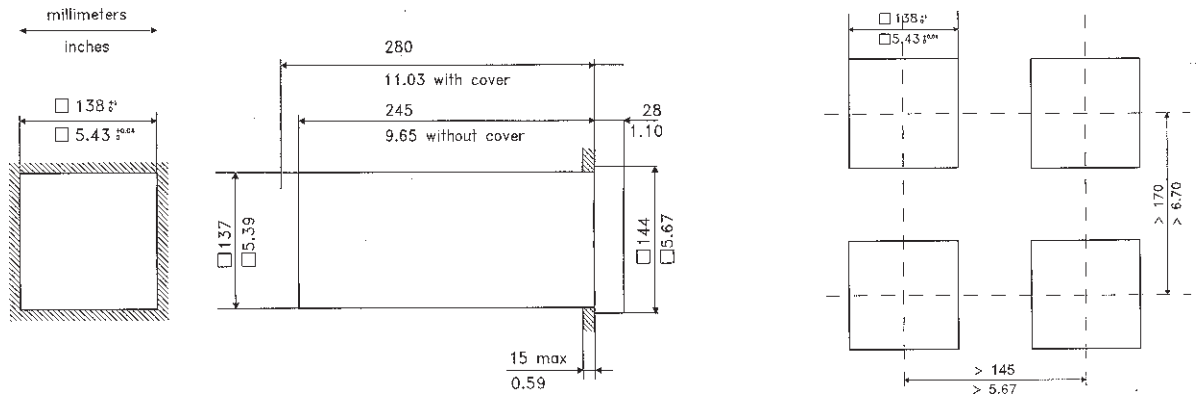

Connections

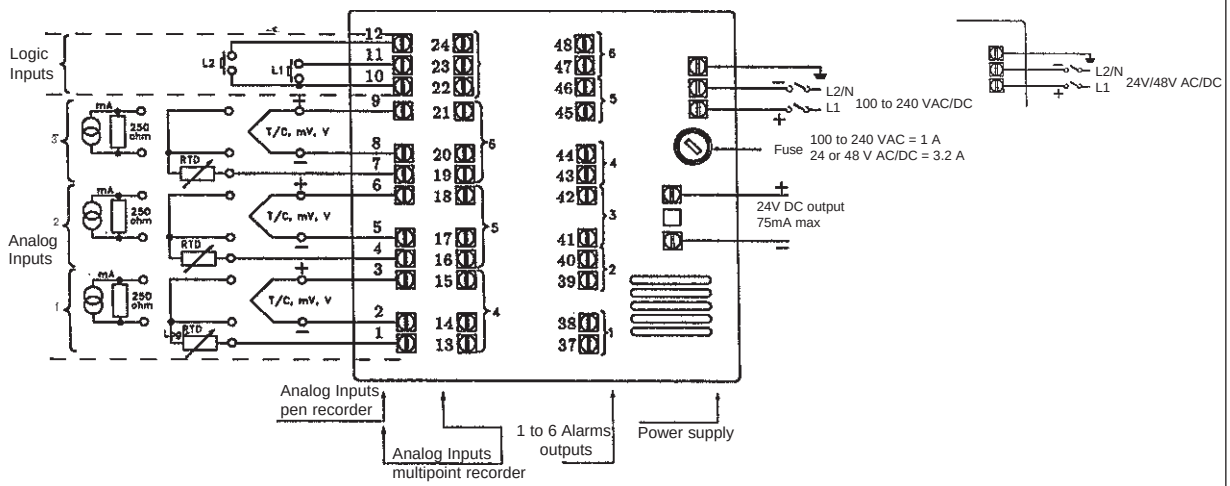

We reserve the right for technical changes without prior notice.

DIGIREC C/D Digital Recorder

CR320
Nov. 15, 1997

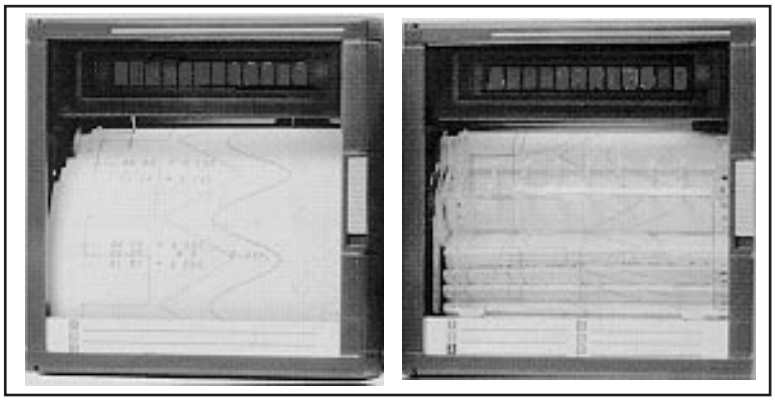

The DIGIREC C and D are the highest functionality 100 mm recorders on the market today. They offer the best chart in the industry, with complete process documentation, at any speed, for the most demanding applications. Their accuracy is by far superior due to the wide choice of available ranges and actuations.

The two versions are:
- **DIGIREC C: 1 to 3 continuous pen**
- **DIGIREC D: 3 or 6 channel multipoint**

Their large and bright display, together with their outstanding chart visibility and fluorescent illumination makes it easy to read and interpret from a considerable distance.
They are particularly suitable for chemicals, pharmaceuticals, power generation, metals, environmental monitoring and food processing applications.

MAIN FEATURES

- 100 mm chart width (DIN 16230)
- 0.1 % accuracy full scale (IEC 873) applicable on a very wide choice of actuations and of ranges
- Each input span is adjustable within the selected range, with up to 2 ranges per channel
- Universal input board (T/C, RTD, mV, mA)
- Alphanumeric display: 12 digits or bargraphs, adjustable brightness
- Roll or fan fold chart
- Fully documented chart with trace colour assignment, alarm trend in red, tagging, zooming, zoning, trend or tabular print outs, messages, all up to 500 mm/h mini
- Up to 10 traces (6 analog, 4 digital inputs) on the multipoint DIGIREC D
- Up to 6 analog inputs can be configured on a 3 pen DIGIREC C (Special Request)
- Full configurability thru: front keys and interactive program menu in 6 languages as standard.
Optional: PC software connected via the front jack, or by communication, with multilevel password security
- 12 user configurable messages (14 characters each)
- 4 lines batch header automatically incremented and saved in case of power failure
- Event precursor mode
- Software upgrades by the front jack (via PC, MODEM or E-mail)
- Input calibration traceability (audit-trail)
- 12 alarm set points, assignable to any input, math result, comm signal
- 2 configurable chart speeds, selectable via alarm, logic input, front keys and communication
- Universal power supply 85 to 264 VAC/DC, 24 or 48 VAC/DC
- IP 54 front protection (IEC 529)
- Compact dimensions: 144 x 144 mm x 245 mm

OPTIONS

- Up to 12 relay outputs assignable to alarms or recorder events
- Up to 4 logic inputs
- Mathematic packages, with the results saved in case of power failure. Math functions can be interconnected
- 24 VDC transmitter power supply
- Communication: ASCII, MODBUS RTU
- Operating temperature up to 60°C
- CSA approved
- 2 Current output 4 to 20 mA option configurable on Analogue Inputs, Maths or Communication

FUNCTIONAL SPECIFICATIONS

Technical data

Technology

Microprocessor based, with non-volatile memory. Flash memory for software upgrade via the front jack

Analogue inputs

DIGIREC C pen recorder
1, 2 or 3 continuous traces.
DIGIREC D multipoint recorder
3 or 6 channels. Inputs are scanned by solid state switches and are galvanically isolated (except for RTD sensor)

Signal source
Thermocouple with individual cold junction compensation
Line resistance up to 1000 ohms T/C, mV, mA, V
RTD Pt 100 3-wire connections, lead resistance per wire 40 Ω balanced
Basic mathematic functions
Square Root extraction (√) Differential = (ΔT)
Filter
A digital filter is configurable per input, 0 to 99 seconds
Field calibration
A channel field calibration - 0 % and 100 % span - may be made to certify input sensor loop
Burnout
T/C, mV, Volt, configurable to upscale, to downscale or none
RTD: inherent upscale.
mA: inherent downscale
Scanning time (solid state relays)
Pen: 1 pen = 160 ms
2 pens = 240 ms
3 pens = 330 ms
Mpt: 3 channels = 330 ms /6 channels = 640 ms
Input impedance
10 Mohm for T/C, mV inputs.
>1 Mohm for volt inputs
Stray rejection
Series mode ≥ 60 db.
Common mode at 250 V AC ≥ 130 db (in T/C inputs config.)

Display

12 digit fluorescent display: 8.5 mm high (matrix display) configurable in:
- digital PV values with engineering unit in accordance with the input range
- 1 or 2 bargraphs
Can display analog input, Tags, math results, communication, alarms or event messages

SATRON instruments
Satron Instruments Inc., P.O.Box 240, FIN-33201 Tampere, Finland
Tel. +358 3 387 1800, Telefax +358 3 387 1899

Brightness
The display brightness is configurable

Recording span

Scaling
Per input, up to 2 analogue scales can be configured to be printed on the chart with the engineering unit channel reference and tag name. Each input can be configured differently
Zoning
Each input can be configured on 0 to 100%, or 0 to 50%, or 50 to 100% of the chart
Pen offset (Pen recorder)
Distance between pen: 2 mm - Offset compensation configurable
Chart definition: 1 step = 0.2 mm
Pen carriage speed
1 second full scale

Chart length
Fan-fold 18 m
(as DIN 16230) / Roll 24 m

Pen trace
Pen
1400 m per pen
Multipoint
250 m per colour

Chart speed
1 or 2 chart speeds, fully configurable, selected by a logic input, alarm or configuration
Speed 1: fully adjustable per step of 1 mm/h, within limit
Speed 2: fully adjustable per step of 1 mm/h, within limit

Speed setting
Pen: 1 to 6000 mm/h (0.04 to 240"/h).
Mpt: 1 to 1500 mm/h (0.04 to 60"/h)
Continuous traces in colour, dotted traces in configurable colour with regular chart documentation (configurable)
Stepping chart motor
Resolution 0.12 mm

Product configuration

• 2 product configurations can be stored and selected by the front keys
Front configuration
• A very simple and interactive product configuration can be carried out on the product with 6 front keys. A friendly program with prompt messages confirms the operation. The prompt messages can be selected in different languages: English, German, French, Spanish, Italian or Swedish.
A 2-level password protects the unit from non-authorized modification (level 1 = limited access; level 2 = full protection)

PC configuration
• Through the front jack the unit can be configured from a PC through a PC interface. This provides the facility to copy the configuration, modify, store, upload or download the product configuration or make a service diagnostic or upgrade a new software or linearize 2 special customer sensors (50 segments each)

Logic inputs
Up to 4 dry contact inputs
(1.5 mA - 12 V DC)

Actions
Change chart speed 1 to speed 2, tab interval 1 to tab interval 2, digital print-out, print message, print inhibit, event trace, print a batch message, tabulate maths calculations. Event marking:
Pen: Pen 1 used as operation marker on the right side of the chart for event 1 and on the left side of the chart for event 2
Mpt: 4 traces maximum on the chart. The trace position and the colour are configurable

Alarms

Set-point
12 alarm set-points, freely assignable to any channel and output relay
Full configurability of set-point, hysteresis and alarm type (high, low, rate of change, deviation)
Function
Can trigger a message, print channel red in alarm, print in alarm, change the range, change the speed, print digital PV values, trigger the event precursor
Output
2, or 6, or 12 SPST relay outputs: 2 A, 250 V AC on resistive load
Contact N.C. in alarm condition (configurable in N.O.)

Alphanumeric documentation

Messages
12 freely assignable and configurable messages of 14 characters each, including the specific letters used in GE & SW
Can be printed with the date/time on top of the traces by alarms, logic inputs or communication
Batch header
One batch message of 4 lines of 14 characters, fully configurable, with incremented batch numbers and date/time. Printed through digital input and saved upon power interruption

Process variable
The traces can be assigned to analog input, mathematics calculations or communication inputs, and are printed in channel colour. Periodic digital printing at intervals configurable from 60 to 480 mm. Digital print-out of PV values through alarms, digital inputs, communication or front keyboard
Tag name
Each channel can be named by 8 characters

Event precursor

Stand-by
The acquisition data is stored in a buffer memory (FiFo)
A stand-by message is periodically printed
Downloading
On event (alarm, digital input, front key, communication) the data is downloaded to be printed on the chart at pre-configured speed
The history before and after the event represents about 50 mm of chart paper

Mathematics package (optional)
Many functions are available such as:
- Basic mathematics functions
- F_o sterilization
- Mass flows
- Vacuum pressure
- Min, max
- Square root
- Totalization
- Energy consumption
- Averages
- Timers
- Carbone Potential

The maths calculations and results are stored during power interruptions

Digital communication (optional)

Protocols
RS232 ASCII communication to PC application. RS422 or RS485 ASCII communic. output. RS422 or RS485 Modbus RTU communication output.
PC Supervision
Through ASCII communication, application software gives the facility to read PV's, alarms or event status, to store the information on a file, to send a message to the recorder or to modify the product configuration
Autodial
The RS232 ASCII communication can dial automatically a phonenumber of a remote station to send via Modem an Alarm message or a periodic Report

Event
The recorder can be configured to deliver an output signal (alarm relay) on a recorder event such as burnout, paper cassette out, battery fail, alarm condition or communication interrupted

Current output (optional)
2 Current output, signals 4 to 20 mA. configurable on - Analogue Inputs, Mathematic Calculations, or communication Signals -
Base Load Resistor 400 ohms

Power supply

85 to 264 V AC/DC or 24 or 48 V AC/DC (+10-15% nominal)
To transmitters
24 V, 50 mA typical, 75 mA max.
Power consumption
3 pens & Mpt: 55 VA max. (Active power 30w)

Clock timer

Format
Year, month, hour, minute can be set
Power interruption
Battery backed (10 years time, 3 years off power)
Accuracy $\pm 10^{-5}$

Packaging

Weight
Pen&Mpt:3.5kg
Front face
144 x 144 mm according to DIN 43718
Depth
245 mm /9.7" behind panel, including terminals and line protection cover
Front window Polycarbonate
Front protection
IP 54 (IEC 529), IP 55 on request
Lock
Latch or key (DIN 43832-N)
Construction Silicon-free
Chart illumination
Fluorescent light
Option
Rear terminal cover, portable case

Mounting
Panel mounting ±30° from horizontal

Wiring
Rear screw terminals.
Terminal modules are plugged on the instrument

Writing

Pen
1 cartridge per pen, fibre tip,1400 m of trace per colour (blue, red, green)

Multipoint
1 print wheel, 6 colours, 250 m of trace per colour (purple, red, black, green, blue, brown)

Noise immunity
According to CE mark 89/336/EEC EMC directive for industrial environment

Safety protection
According to CE mark 73/23/EEC low voltage directive
Complies with IEC 1010 installation category 2 for personal protection
Designed to meet UL.
CSA C22.2 N142 standard (certified)

Electrical insulation

Input to input
Continuous voltage up to 280 VAC or 400 VDC (except for RTD input)
Input to ground
Test voltage 2.1 kVDC for 1 minute
Input to line voltage
Test voltage 2.1 kVDC for 1 minute
Line voltage to ground
Test voltage 2.1 kVDC for 1 minute
Alarm relay to ground
Test voltage 2.1 kVdC for 1 minute
Logic input to ground
Test voltage 500 VDC for 1 minute

Temperature

Ambient
0 to 50°C (32 to 120°F)
Optionally 0 to 60°C (32 to 140°F)
Storage
-40 to +70°C (-40 to +160°F)

Humidity

Roll
10 to 90% RH non-condensing
Fan-fold
15 to 80% RH non-condensing

Vibrations
Frequency
10 to 60 Hz, amplitude 0.07 mm;
60 to 150 Hz, acceleration 1 g

Seismic Test
Qualified according ANSI/IEEE std 344.1987

Quality assurance
ISO 9001 factory certified

Accuracy

Reference conditions

Temperature
23°C ±2°C (73°F ± 3°F)
Humidity 65% RH ± 5% RH
Line voltage nominal ±1%
Source resistance 0 Ω
Series mode 0 V
Common mode 0 V
Frequency nominal ±1 %

Accuracy
Accuracy of displayed values:
0.1 % of selected input range (IEC 873) (except for ranges marked **, see foll. page)
Cold junction accuracy: 0.5 °C
For mA inputs, the accuracy of the input resistor shall be added to the instrument accuracy. Chart resolution: 0.2 mm

Extreme conditions:

Operating
Temperature
0 to 60°C (32 to 140°F)
Humidity
10 to 90% RH non-condensing
Storage
Temperature
-40 to +70°C (-40 to 158°F)
Humidity
5 to 95% RH non-condensing

Rated limits and associated drifts

Parameter	Rated limits	Influence on accuracy
Temperature	0 to 50°C (32 to 120°F)	0.1 % per 10°C Cold junction 0.3°C/10°C
Supply voltage	85 to 264 V AC	No influence
Source resistance	T/C, mV	6µV per 100 Ω of line resistance 1000 Ω max
	RTD	0.1 °C per Ω in each wire balanced leads 40 Ω max.
Humidity	10 to 90% RH at 25°C	0.1 % max.
Long-term stability		0.1 % per year
Vibrations	1.25 mm at 0 to 14 Hz 1 g at 14 to 250 Hz	

Available ranges

Linear
0/10 mV
-10/10 mV
0/20 mV
-20/20 mV
0/50 mV
-50/50 mV
10/50 mV
0/100 mV
-100/100 mV
0/500 mV
-500/500 mV
0/1 V
-1/1 V
0/2 V
-2/2 V
0/5 V
-5/5 V
1/5 V
0/10V
-10/10 V
0/20 mA *
4/20 mA*

RTD/OHMS

Pt 100Ω at 0°C

** IEC -50/150°C	**JIS -50/150°C
** IEC -58/302°F	**JIS -58/302°F
** IEC 0/100°C	**JIS 0/100°C
** IEC 32/212°F	**JIS 32/212°F
** IEC 0/200°C	**JIS 0/200°C
** IEC 32/392°F	**JIS 32/392°F
** IEC 0/400°C	**JIS 0/400°C
** IEC 32/752°F	**JIS 32/752°F
** IEC -200/500°C	**JIS -200/500°C
** IEC -328/932°F	**JIS -328/932°F

** Ni 50 Ω -80/320°C
** Ni 50 Ω -112/608°F
** Ni 508 Ω -50/250°C
** Ni 508 Ω -58/482°F
** Cu 10 Ω -20/250°C
** Cu 10 Ω -4/482°F
OHM 0/200
OHM 0/2000

Thermocouple

J -50/150°C	S 0/1600°C	U -50/150°C	
J -58/302°F	S 32/2912°F	U -58/302°F	
J 0/400°C	S -20/1760°C	U 0/150°C	
J 32/752°F	S -4/3200°F	U 32/302°F	
J -200/870°C		U 50/150°C	
J -328/1598°F	N 0/400°C	U 122/302°F	
	N 32/752°F	U -200/400°C	
L-50/150°C	N 0/800°C	U -328/752°F	
L -58/302°F	N 32/1452°F		
L 0/400°C	N 0/1200°C	NiMo 0/1400°C	**Reference**
L 32/752°F	N 32/2192°F	NiMo 32/2552°F	**Accuracy**
L -200/870°C	N -20/1300°C		**Range**
L -328/1598°F	N -4/2372°F	W-W 26 -20/2320°C	400 to 2300°C
		W-W 26 -4/4208°F	750 to 4200°F
K 0/400°C	T -50/150°C	W5-W 26 -20/2320°C	400 to 2300°C
K 32/752°F	T -58/302°F	W5-W 26 -4/4208°F	750 to 4200°F
K 0/800°C	T 0/150°C		
K 32/1452°F	T 32/302°F	PR 20-40 0/1800°C	1100 to 1800°C
K 0/1200°C	T 50/150°C	PR 20-40 32/3272°F	2010 to 3270°F
K 32/2192°F	T 122/302°F		
K -200/1370°C	T -200/400°C	B 40/1820°C	600 to 1820°C
K -328/2498°F	T -328/752°F	B 104/3308°F	1110 to 3300°F
R -20/1760°C			
R -4/3200°F			

Notes: **: Accuracy: 1 °C (or 1.8 °F)
For non-linear temperature transmitter (1 to 5 V DC, 4 to 20 mA, 0 to 5 V DC, 0 to 20 mA) the transmitter range must be identical to the full actuation range of the recorder. Provision for T/C input for remote compensation box at fixed temperature of 50°C or 60°C. When temperature is not fixed, any input can be used as remote compensation temperature measurement.
* mA inputs into 250 ohms input resistor.

Dimensions

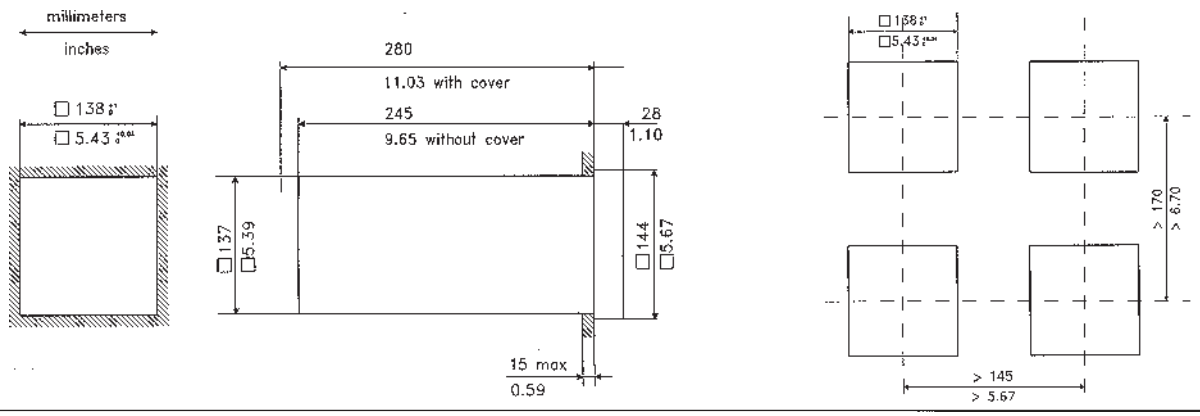

Connections